BRAVI PLATFORMS

Use and Safety Manual

ISP-11

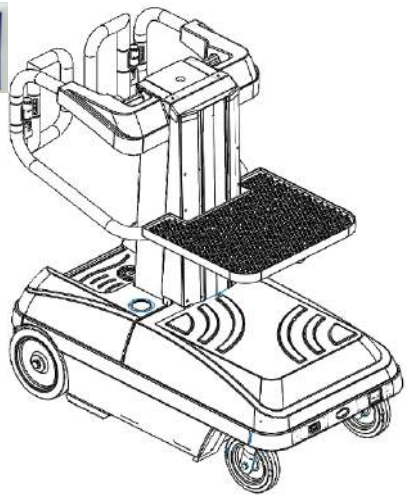

Aerial Platform
Stock-picker
LUI MINI S.K.
(ISP-11)
LUI MINI P.A.
(ISP-7M)

Always keep this manual in the machine-manual box

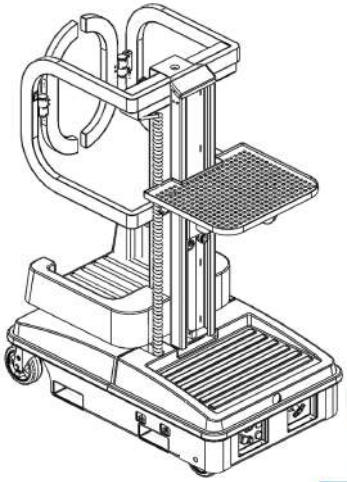

Rev01_14

ISP-7M

ANSI

CE

AEUP Absolute E-Z Up

INTRODUCTION

This manual is an extremely important element. Always keep it stored on the machine.

The purpose of this manual is to illustrate, for the owner, users, operators, firms offering leasing and those subjects receiving leasing of the machine, the essential precautions and operational procedures for the safe and correct operation of the machine based upon the utilisation anticipated.
Due to the continuous improvements brought about on the products, the firm, BRAVIISOL DIVISIONE MECCANICA S.R.L, reserves the right to modify the technical specifications of this machine without any notice.
For updated information, contact

Braviisol Divisione Meccanica s.r.l.
S.S. 16 Adriatica km. 314,600
60022 Castelfidardo (AN) Italy
Tel. 0039071.7819090 Fax 0039071.7819355

HAZARD AND TERMINOLOGY SYMBOLS

This hazard symbol is necessary to call attention to potential dangers that could cause injuries. To avoid possible serious injuries or fatal accidents, comply with all of the safety instructions that follow this symbol

DANGER

INDICATES AN IMMINENTLY HAZARDOUS SITUATION, WHICH IF NOT AVOIDED COULD CAUSE SERIOUS INJURIES OR EVEN FATAL ACCIDENTS. THIS ADHESIVE HAS A RED BACKGROUND.

ATTENTION

INDICATES A POTENTIALLY HAZARDOUS SITUATION, WHICH IF NOT AVOIDED COULD CAUSE INJURIES OF A MODERATE ENTITY. IN ADDITION, IT MAY BE USED TO SIGNAL UNSAFE PROCEDURES. THIS ADHESIVE HAS A YELLOW BACKGROUND.

WARNING

INDICATES A POTENTIALLY HAZARDOUS SITUATION, WHICH IF NOT AVOIDED COULD CAUSE SERIOUS INJURIES OR EVEN FATAL ACCIDENTS. THIS ADHESIVE HAS A BLUE , WHITE OR ORANGE BACKGROUND.

WARNING

THIS PRODUCT MUST CONFORM TO ALL OF THE PROCEDURES REGARDING SAFETY INDICATED IN THE TECHNICAL BULLETINS.
FOR INFORMATION ON EVENTUAL TECHNICAL BULLETINS REGARDING THE SAFETY OF BRAVIISOL DIVISIONE MECCANICA S.R.L. PRODUCTS BEING USED, CONTACT BRAVIISOL DIVISIONE MECCANICA S.R.L., OR ELSE YOUR LOCAL AUTHORISED BRAVIISOL DIVISIONE MECCANICA S.R.L. REPRESENTATIVE.

IMPORTANT

BRAVIISOL DIVISIONE MECCANICA S.R.L. REGULARLY SENDS TECHNICAL BULLETINS REGARDING SAFETY TO THE REGISTERED OWNER OF THE MACHINE.
CONTACT BRAVIISOL DIVISIONE MECCANICA S.R.L TO MAKE SURE THAT THE INFORMATION RELATIVE TO THE CURRENT OWNER HAS BEEN UPDATED AND IS EXACT.

IMPORTANT

EVENTUAL ACCIDENTS OCCURING DURING THE USE OF BRAVIISOL DIVISIONE MECCANICA S.R.L. PRODUCTS, WHICH MAY HAVE CAUSED INJURIES OR DEATH TO PERSONNEL OR ELSE SIGNIFICANT DAMAGE TO PROPERTY OR TO THE SAME BRAVIISOL DIVISIONE MECCANICA S.R.L. PRODUCTS, ARE TO BE IMMEDIATELY REPORTED TO BRAVIISOL DIVISIONE MECCANICA S.R.L.

For:

- Accident notification
- Publications relating to the safety of the product
- Updating of the information relative to the current proprietor
- Questions relating to the safety of the product
- Information regarding compliance with standards and regulations
- Questions relating to the special applications of the product
- Questions relating to the modifications of the product

CONTACT:

BRAVIISOL
Divisione Meccanica s.r.l.

S.S. 16 Adriatica km. 314,600
60022 Castelfidardo (AN)
Tel. +39071.7819090
Fax +39071.7819355

Reference Regulations:
2006/42/EC
DIN EN280
DIN EN 1076-2:2000

Dynamic and static tests performed by:

TÜV SÜD Industrie Service GmbH
Zentralbereich Fördertechnik-
Sonderbauten
Hebezeuge und Krane
Westendstraße 199
80686 München
Deutschland

Document: EG-MRL 048
Date: 20 April 2010

Document: KP 172
Date: 18 January 2012

SECTION 1.
SAFETY PRECAUTIONS

1.1 GENERAL INFORMATION

This section illustrates the precautions necessary for the correct and safe use and maintenance of the machine. To guarantee the correct use of the machine, it is indispensable to establish a daily routine procedure based on the directions furnished in this manual.
In addition, to guarantee the safe operation of the machine, it is necessary that a qualified person establish a maintenance program based on the information provided in this manual and in those for repair procedures and maintenance. Said program is to be followed scrupulously.
The owner, users, operators, firms offering leasing and those subjects receiving leasing of the machine must not accept the responsibility for its function before having read this manual and completed training in the operational procedures, under the supervision of a qualified, expert operator.
For further information in regard to safety, training, inspection, maintenance, application and operation, contact Braviisol Divisione Meccanica s.r.l.

WARNING

LACK OF OBSERVATION OF THE SAFETY PRECAUTIONS LISTED IN THIS MANUAL COULD CAUSE DAMAGE TO THE MACHINE , TO PROPERTY AND SERIOUS OR FATAL INJURIES TO PERSONS

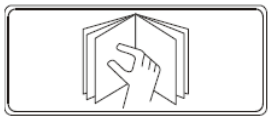

1.2 PRELIMINARY PROCEDURES

Operator Training and Comprehension

- Before using the machine, read the manual thoroughly.
- Use the machine only after having completed training by authorised personnel.
- Use of the machine is permitted only for authorised and qualified personnel, who have carefully read and fully understood the indications of HAZARD, WARNING and ATTENTION as well as the operating instructions of the machine found in the manual.
- Use the machine for applications among those anticipated by BRAVIISOL DIVISIONE MECCANICA S.R.L..
- All operational personnel must become familiar with the commands, controls and emergency functions of the machine specified in the manual.
- Carefully read and obey all of the company rules and local and governmental regulations in force relative to the operation of the machine.

Machine inspection

- Use the machine only after having carried out the functional inspection checks and verifications. For further indications, consult Section 2 of this manual.
- Activate the machine only after having carried out all of the service and maintenance procedures indicated by the requirements specified in the procedure and maintenance manual.
- Make sure that all of the safety devices function correctly. Eventual modifications of these devices constitute a violation of safety regulations.

EVENTUAL MODIFICATIONS OR ALTERATIONS OF THE AERIAL WORK PLATFORM MAY BE CARRIED OUT EXCLUSIVELY SUBJECT TO WRITTEN AUTHORISATION OF THE MANUFACTURER.

- Do not run machines on which the signs or adhesive stickers indicating safety regulations or instructions are illegible or missing.
- Avoid accumulations of debris on the floor of the platform. Avoid that mud, oil, grease or other similar slippery substances from coming into contact with footwear or the floor of the platform.

Inspection of the Workplace

- Before using the machine, the operator must take all necessary precautions so as to avoid any hazard in the workplace.
- Do not activate the platform on trucks, semi trailer truck beds, railroad cars, boats on the water, scaffolds or similar structures or vehicles, on which BRAVIISOL D.M. SRL has not approved operation in writing.
- The machine may be operated at temperatures between -20 e 40° C (between 0 e 104° F). Consult BRAVIISOL D.M. SRL for values relative to operation of the machine at temperatures not included in the range indicated.

SECTION 1.
SAFETY PRECAUTIONS

1.3 OPERATION

General information

- Use the machine exclusively for transport of personnel with respective tools and equipment for the manual handling of stock items.
- Do not operate a broken machine. If a malfunction occurs, turn off the machine.
- Do not suddenly shift the switches or command levers from one position to the next passing through the neutral position. Always bring the switch to the neutral position before shifting it to the position corresponding to the next function. Actuate the commands using a slow and uniform pressure.
- If there are persons on the platform, allow personnel to release or activate the machine from the ground only in case of emergency.
- Make sure that electrical tools are put away properly avoiding their being left hanging by their power cords in the platform work area.
- Before leaving the machine unattended, completely lower the basket and switch off the machine. Remove the key to prevent unauthorised use of the machine.
- Transport of passengers on the machine is forbidden.
- During operation, only the operator is permitted to be present on the machine.
- The battery fluid is extremely corrosive. Make sure that it does not come into contact with the skin or clothing.
- Charge the batteries in a well ventilated area.

1.4 RISK OF FALLING

- Before using the machine, make sure that all of the safety railings and gates are attached in their correct positions.
- Keep both feet firmly planted on the floor of the platform.
- Do not set ladders, boxes, steps, boards or other similar articles on the platform floor in order to increase the range of action of the same.
- Do not use the lifting group to climb up onto the platform nor for climbing down from it.
- Pay very close attention when getting onto the platform or when getting off of it. Make sure that the lifting group is completely lowered. When getting onto the platform or when getting off of it, do so facing the machine.
- The operation of the commands, controls and safety sensors, for LUI MINI S.K., have been designed in such a manner that the operator may always keep "four points of contact" with the machine: Both hands and both feet MUST BE continuously in contact with the machine when it is in operation.
- Always keep “three points of contact ” with the machine, doing so in such a manner that both hands and one foot or else both feet and one hand are continuously in contact with the machine when getting on or getting off of it.
- As per the ANSI A92.6 , the guardrail system of the aerial platform provides fall protection. However, if Lanyard Attachment Anchorage is required by site authorities or other regulations, the anchorage point on this machine is recommended to be used as an attachment point for safety belt . Do not use this point to lift, anchor, secure or support the platform or any other apparatus or material. **The lanyard attachment anchorage is used for travel restraint, within the limits of the platform only. It is not a fall arresting device. Use as such could result in death or serious injury.**

1.5 ELECTROCUTION HAZARD

The machine is not electrically insulated.
Maintain a distance of at least 3 metres (10 feet) between any part of the machine and its occupant, with respective tools and equipment, and an electrical power line or piece of equipment with an electrical charge rated at least 50,000 Volts.
It is necessary to add 0.3 metres (1 foot) for each additional increase equal to or less than 30,000 Volts.
It is possible to reduce the minimum safe operational distance in presence of insulating barriers for the prevention of contacts, if those barriers have been adjusted to the voltage of the electrical lines they are set to protect.
The barriers must not be a part of the machine *nor may they be connected to it*.
The minimum operational safety distance may be reduced within the operational dimensions indicated by the insulating barriers. This distance is to be determined by a qualified person subject to the company, local and governmental regulations regarding the undertaking of work operations in the proximity of high voltage equipment.

VOLTAGE RANGE (FROM PHASE TO PHASE)	MINIMUM OPERATIONAL SAFETY DISTANCES m (ft)
From 0 to 50 kV	3 (10)
From over 50 kV to 200 kV	5 (15)
From over 200 kV to 350 kV	6 (20)
From over 350 kV to 500 kV	8 (25)
From over 500 kV to 750 kV	11 (35)
From over 750 kV to 1000 kV	14 (45)
NOTE: These minimum operational safety distances are to be applied except in cases in which company, local or governmental regulations are more stringent.	

1.6 TOPPLING HAZARD

- Before driving the machine, the user must become familiar with the surface area of the workplace. While driving the vehicle, do not exceed the slopes or the transversal slopes permitted.
- Do not raise the platform or drive the machine with the platform raised on a slope or on an irregular or soft surface.
- Before driving onto floors, bridges, trucks or other surfaces, verify the maximum load bearing values of those.
- Do not exceed the maximum load of the elevated platform. Distribute cargo uniformly over the cargo compartment and on the platform.
- Keep the chassis of the machine at a minimum distance of 0.6 metres (2 feet) from holes, rough areas, descents, obstacles, debris, hidden holes and other potential hazards that may be found on ground level.
- Do not attempt to use the machine as a crane. Do not tie or bind the machine to any other adjacent structure.
- Do not rise the platform in windy or gusty condition
- Do not increase the size of the platform with extensions of the landing or unauthorised additions. If the area of the machine exposed to the wind is increased, its stability is decreased.
- If the lifting group or the platform become stuck in such a manner that one or more wheels come off of the ground, it is necessary to have the operator climb down off of the platform before attempting to free the machine. To stabilise the machine and have personnel descend from the platform, use a crane, a fork lift truck or other suitable equipment.
- It is strictly forbidden to go in and out the platform when raised

SECTION 1.
SAFETY PRECAUTIONS

1.7 CRUSHING AND IMPACT HAZARDS

- All personnel, whether operational or on the ground, must wear the personal safety equipment required by the regulations in force or by the risk analysis performed in the workplace.
- When the machine is being used or the platform is being raised or lowered, make sure to observe the distances above, below and on both sides of the platform itself.

- When the machine is in operation, do not lean out from the platform railings.
- When driving the machine in areas of limited visibility, have an assigned person proceed ahead so as to indicate any eventual hazard.
- When driving, always keep non operational personnel at a distance of at least 1.8 metres (6 feet) from the machine.
- Adjust the driving speed based upon the following conditions: ground or floor surface conditions, traffic, visibility, slope, location of other personnel and any other factors that could constitute a hazard of collision or personal injuries.
- Keep the braking distances in mind independently of the speed of the machine.
- Do not drive at high speed in restricted, tight or narrow areas or in reverse gear.
- Always pay maximum attention so as to avoid that eventual obstacles collide with the operational commands or the person on the platform or that they interfere with the same.
- Make sure that the operators of other machines that are elevated or on ground level are informed regarding the presence of the aerial platform. Disconnect the electrical power to elevated cranes.
- Advise other personnel not to work, stand, or transit under the elevated platform. Delineate the floor or ground with appropriate barriers, as needed.

1.8 LIFTING AND TRANSPORT

General information

- During lifting and transport, personnel are prohibited from standing on the platform.
- Push or tow, for LUI MINI S.K., the machine exclusively in the event of an emergency, malfunction, power interruption or to load or unload it and ALWAYS after having unlocked the motor-brake, according to the instructions found in this manual.
- Before lifting or transport, make sure that the platform has been completely lowered and is empty.
- During lifting of the machine by way of a fork lift, arrange the forks exclusively in correspondence to the appropriate areas of the machine itself. Carry out the lift by way of a fork lift with an adequate load capacity. For the weights of the machine consult the technical specifications table in Section 5 - Technical Specifications of the Machine.
- For lifting information, consult, section 3 - Machine Operation, in this manual.

SECTION 2.
PREPARATION AND INSPECTION

2.1 PERSONNEL TRAINING

The aerial platform is a personnel transport device.
Therefore, it is to be used and maintained exclusively by trained and qualified personnel.
Use of the machine is not permitted by persons under the influence of alcohol or drugs or those subject to attacks of epilepsy, vertigo or loss of physical control.

Operator training must include what follows:

1. Use and limits of the commands from the platform, from the ground and emergency commands as well as safety systems.
2. Command and control signage, instructions and warnings attached to the machine.
3. Regulations defined by the employer and by government regulation.
4. Use of the approved anti-fall protection device, when needed.
5. Sufficient knowledge of the mechanical function of the machine to recognise a true or potential malfunction or breakdown.
6. Safe methods for the use of the machine when encountering super-elevated obstacles, other equipment or obstacles in movement, dips, holes and inclined descents.
7. Methods for the avoidance of hazards from unprotected electrical conductors.
8. Requirements for a particular job or a particular application of the machine.

Training supervision
Training must be given under the supervision of a qualified person, in an open area, free of obstacles. It must continue until the trainee is capable of using the machine safely.

Operator responsibility
The operator must be instructed regarding the responsibility and the authority to turn off the machine in case of malfunction or breakdown or in the presence of other unsafe conditions, relative to both the machine and the workplace.

NOTE: *The manufacturer or the distributor must make qualified personnel available for training both at the time of delivery of the first units and afterwards, if requested by the end user or the by assigned personnel.*

2.2 PREPARATION INSPECTION AND MAINTENANCE

BRAVIISOL provides information relative to machine inspection, indicated in the following table 2.3 on page 14.
For further information regarding the aerial work platforms, consult local regulations. The frequency of inspections and maintenance procedures must increase according to necessity: when the machine is used under adverse environmental conditions, with greater frequency or for difficult or particularly demanding jobs.

2.3 PRELIMINARY INSPECTIONS BEFORE START UP

The inspection prior to use includes the following operations:

1. Cleaning – Verify and check for any eventual leaks (oil, hydraulic fluid or battery acid) or for foreign objects on any of the surfaces. Warn maintenance personnel of any apparent leaks.

2. Signs and adhesive stickers – Check and verify that these are all clean and legible.
Check that no sign or adhesive sticker is missing.
Make sure that any sign or adhesive sticker that is not legible is cleaned or substituted. *(See "Application of the adhesive stickers" in Section 3)*.

2.A

3. Use and safety manuals – make sure that the following manuals are present in the weather resistant compartment (PIC. 2.A):
Use and Safety Manual, EMI Safety Manual (only for ANSI/CSA specifications) and the ANSI responsibility Manual (only for ANSI/CSA specifications).

4. Outline of complete daily inspection – *(See Section 2.4).*

5. Battery – Charge as needed (See Section 3.5).

6. Hydraulic oil – The level of the hydraulic oil in the reservoir can vary according to the temperature of the oil. That is, in a cold machine, it is possible that the Oil level will not reach the FULL mark on the dip stick.
Lift and lower the elevator several times to obtain a more precise reading of the level on the dip stick.
When the hydraulic oil is heated up, verify the reading on the dip stick, which should indicate a level equal or near the FULL mark.

- DO NOT FILL BEYOND THE FULL MARK.
- ALWAYS TOP UP the oil if its level is below the mark - ADD.

NOTE:
Check the level of the hydraulic oil **with the machine having the basket lowered,** from the sight glass found under the cover. If necessary, top up with a mineral oil with a viscosity index of 22 (for climactic conditions with very cold temperatures, that is, below -20°C, the use of mineral oil with a lower freezing point , about –45°C, is recommended.

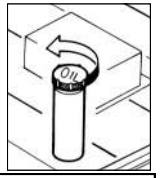

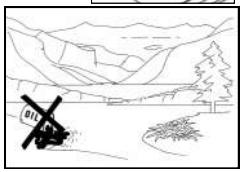

Attention Pollution Hazard
Do not dispose of the oil into the environment.

TABLE 2.3

TYPE	FREQUENCY	MAIN RESPONSABILITY	QUALIFICATION FOR SERVICE	REFERENCE
PRELIMINARY INSPECTION FOR START UP	Before each day of work, or else at each change of operator.	User or operator	User or operator	Safety and Use Manual and relative Inspection Forms
FREQUENT INSPECTION	At an interval of 3 months or 150 hours, according to the circumstances, or else if the machine has not been used for over 3 months or else if it has been purchased used.	Owner, concessionary or user.	BRAVI Qualified Mechanic	Service and Maintenance Manual and relative Inspection Forms
ANNUAL INSPECTION	Annual, within 13 months from the last inspection	Owner, concessionary or user.	BRAVI Qualified Mechanic	Service and Maintenance Manual and relative Inspection Forms

2.4 COMPLETE DAILY INSPECTION

WARNING

TO AVOID POSSIBLE INJURIES, MAKE SURE THAT THE ELECTRICAL POWER SUPPLY OF THE MACHINE IS TURNED OFF DURING THE INSPECTION. DO NOT USE THE MACHINE BEFORE ANY AND ALL MALFUNCTIONS HAVE BEEN REPAIRED.

WARNING

DO NOT NEGLECT THE VISUAL INSPECTION OF THE LOWER PART OF THE BASE FRAME.
CHECK AND VERIFY THAT THERE ARE NO FOREIGN OBJECTS OR DEBRIS THAT COULD CAUSE SERIOUS DAMAGE TO THE MACHINE.

The operator must not accept the responsibility of operating the machine until this manual has been read and understood in each of its parts and a first test-drive of the vehicle has been taken under the supervision of a qualified expert operator.
Only authorised personnel and qualified operators may operate this machine.
This manual and its attachments must be considered an integral part of this machine and must remain with the machine at all times.

WARNING

The manufacturer, BRAVIISOL D.M. SRL, has no direct control over the utilisation of the machine. Utilisation of the machine according to safety regulations is the responsibility of the end user.

It is the responsibility of the operator to make a thorough inspection of the machine before each use.

The purpose of the complete daily inspection is to check and verify that the machine is in order, to ascertain the absence of anomalies, faults or malfunctions and to determine if routine maintenance is required. If any damage or unauthorised changes to the machine, with respect to how it was delivered, are found, immediately tag it as such and DO NOT USE IT.

2.5 BEFORE EVERY USE

- Make sure that all of the manuals are in their weather resistant manual box on board the machine.
- Make sure that the tag with the serial number of the platform as well as all of the adhesive safety stickers are in their place, and that they are all perfectly integral and legible.
- Inspect the machine in order to ascertain the absence of anomalies, welding cracks, faults or malfunctions or any damage or unauthorised changes to the machine, with respect to how it was delivered by the manufacturer.
- Check and verify the basket, the platform railings, check that the entry gate functions properly and that it closes completely and automatically.
- Check the water level in the batteries and make sure that there are no leaks. The battery cables must be correctly connected to the terminals. There must not be any corrosion on them.
- Check and verify by testing that all of the safety and personal protection devices function properly.
- Check and verify that the tires show no damage, abrasions or deep cuts. Check and verify that there is no debris attached to the wheels, tires or around them.
- Visually inspect the hydraulic, electrical and mechanical components. For each component make sure that all of its parts are present, not loosened and fixed solidly in their respective positions and that there are no visible leaks, signs of excessive wear or damaged areas.
- Check and verify that there are no wires or cables that have come loose and that hang from the underside of the vehicle.
- Check and verify the correct operation of the key switch in the basket.
- Check and verify the operation of the emergency stop buttons: those that are found on the command panel in the basket and the one on the chassis control panel.
- Check and verify, by testing, the proper operation of the manual descending emergency lever.

2.6 FUNCTIONAL VERIFICATIONS

At the end of the “complete inspection”, carry out a functional verification of all of the systems in an area that is free of super-elevated or ground level obstacles.
For further indications on operation, consult Section 3 of this manual.

WARNING

IF THE MACHINE DOES NOT FUNCTION PROPERLY, TURN IT OFF IMMEDIATELY. NOTIFY THE PERSONNEL ASSIGNED TO MAINTENANCE OF THE PROBLEM. DO NOT USE THE MACHINE UNTIL IT HAS BEEN DECLARED SUITABLE FOR SAFE OPERATION.

Functional verification elements

1. From the ground command panel, without a load on the platform, perform the following operations:

   a. Actuate the ground commands: the raising and the lowering of the platform.
   b. Make sure that all of the machine functions have been disabled when the emergency stop button is activated (pressed).
   c. Check and verify the proper function of the manual descending emergency lever.

2. From the platform command panel, perform the following operations:

   a. Raise and lower the platform from 0.61 to 0.92 metres (from 2 to 3 ft) several times. Check and verify that the raising and the lowering of the platform come about in a regular manner. Check and verify that with the raising of the basket the driving Is activated in automatic slow safety speed (only for LUI MINI S.K.)
   b. Actuate all of the functions and check and verify the correct operation of all of the limit switches, the general emergency switches and the actuation switches.
   c. Vehicle brakes - Drive the vehicle on an slope (not exceeding its nominal operational capacity on the grade) then stop it, so as to make sure that the brakes will hold on an incline.

3. **Slope alarm limit**: with the platform completely lowered, drive the vehicle on a slope greater than 1.5° in any direction **(not exceeding its nominal operational capacity on a grade).** The alarm of the vehicle will indicate a sloped condition in the event of an attempt to raise the platform.
4. **Transmission speed reduction limit:** If the platform is raised for more than 0.4 m (1.5 - 2 ft), the transmission velocity is reduced by 1/4 compared to the transmission speed for the lowering of the platform (only for LUI MINI S.K.)
5. **Platform gate opening limit:** The entry gate is equipped with springs on both of its wings that automatically close the entry gate as soon as they are released.
6. **Left/right handle and footswitch sensor** - The machine operates (it moves and it is raised) exclusively if the operator keeps his or her hand resting on the left and right side handle (pic.A) and with both heels pressing on the footswitches positioned on the platform (pic.B). This safety position is to be maintained throughout all operations of the machine (only for LUI MINI S.K.).
   In the LUI MINI P.A. only one footswitch need to be pressed(pic.B2).

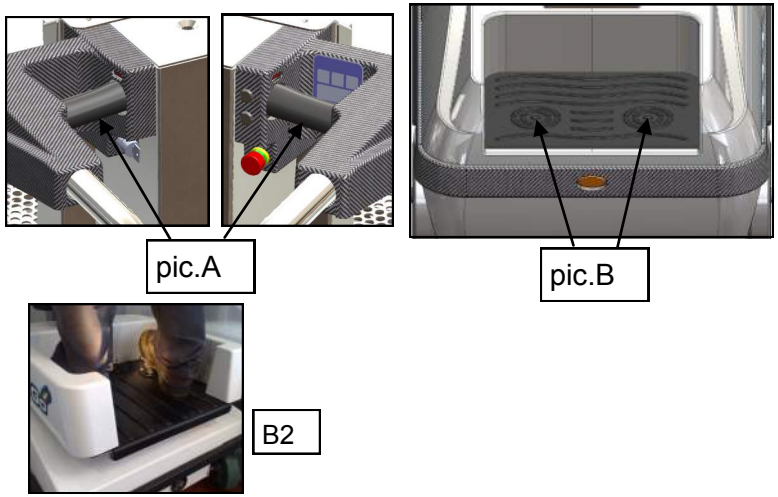

7. Make sure that all the machine functions have been disabled when the emergency stop button is activated (pressed).

SECTION 3.
OPERATION OF THE MACHINE

3.1
THE MANUFACTURER HAS NO DIRECT CONTROL WHATSOEVER ON THE APPLICATION OR THE OPERATION OF THE MACHINE.
THE USER AND THE OPERATOR ARE HELD TO FOLLOW THE CORRECT SAFETY PROCEDURES.
This section provides information necessary for the comprehension of the operational command functions.

3.2 DESCRIPTION OF THE MACHINE

This lifting device is an electrical, self-propelled (LUI MINI S.K.) or push around (LUI MINI P.A.) vehicle and it is equipped with an aerial work platform, mounted on a strut elevation mechanism, actuated by a special single hydraulic cylinder with a synchronised effect.
The purpose of the personnel elevation machine is to allow access to areas above ground level, and the placing of loads, which will be placed on the load platform.
The main command panel is located on the platform.
From the platform command panel, the operator may drive the vehicle (only for LUI MINI S.K.) and lift up or lower the platform. The LUI MINI S.K. is equipped with an electrically actuated cargo lift area controlled by two easily accessed buttons located on the side of the machine, which allow the operator to raise and lower the cargo platform, which is reserved only for objects and materials, without leaving his or her position.
The LUI MINI P.A. is equipped with a manually actuated cargo lift area controlled by an easily lever located underneath the cargo shelf, which allow the operator to raise and lower the cargo platform, which is reserved only for objects and materials.

The LUI MINI S.K. has two drive wheels in the rear and two castor wheel in front.
It is necessary to use the ground programmable command station panel when the machine is being serviced or functional verifications are performed or in case of emergency, if the operator on the platform is not capable of lowering it.

The LUI MINI P.A. has two free castor wheel in the rear and two self braking wheel in front. It is necessary to use the ground command station when the machine is being serviced or functional verifications are performed or in case of emergency, if the operator on the platform is not capable of lowering it.
NEVER MANOEUVRE THE LUI MINI P.A. WITH A PERSON INSIDE THE BASKET

3.3 FUNCTION OF THE MACHINE

Preliminary Operations

Before activating the machine using the commands on the ground station panel or those on the platform, it is necessary to satisfy the following command conditions.

- Battery voltage must be sufficient for operation. The battery discharged alarm does not necessarily have to be present either on the ground command panel, or on the battery status indicator found on the side of the vehicle (only for LUI MINI S.K.).
- The key switch on the basket command station panel must be set either on the ground command mode or on the platform command mode.
- The emergency stop buttons, on the command panel of the platform and on the ground command panel must be in RESET position (extended outward).
- For LUI MINI S.K.: the LCD screen on which the status of the machine may be visualised on the ground command panel must indicate normal operational conditions upon turn-on of the machine.
- FOR LUI MINI S.K. :the machine operates, (it moves and lifts) only if the operator has his or her hand on the left and right sensor handle and both heels pressing down on the foot switches on the platform. This safety position is to be maintained at all times during operation. PICs. A and B section 2.6)
- FOR LUI MINI P.A.: the machine raise and lower only if the operator has his or her foot pressing down on the footswitch on the platform. (PIC B2 section 2.6)

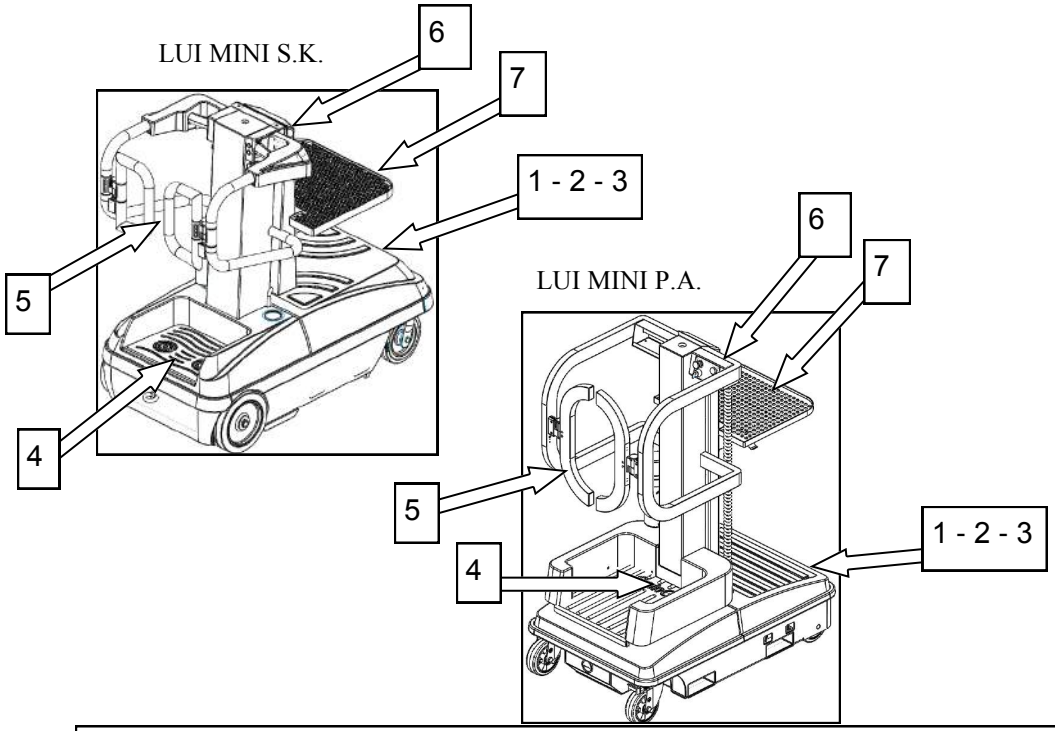

1. **Ground Command Panel (Section 3.7)**
2. **Manual Descending Emergency Lever (Section 3.8)**
3. **AC power supply for battery charger and charge status LED (Section 3.6)**
4. **Platform foot switch - (Section 3.6)**
5. **Platform Entry Gate**
6. **Platform Command Panel (Section 3.6)**
7. **Materials handling compartment**

3.4 BOOT - (TRANSPORT PLATFORM)

Removal

1. Lift the boot in correspondence to the back part (column) so as to free bumper on the base frame. Therefore have the boot slide forward while lifting it to completely detach the boot from the vehicle.

Installation

1. Position the boot on its relative bumper on the upper part of the frame and have it slide backwards.

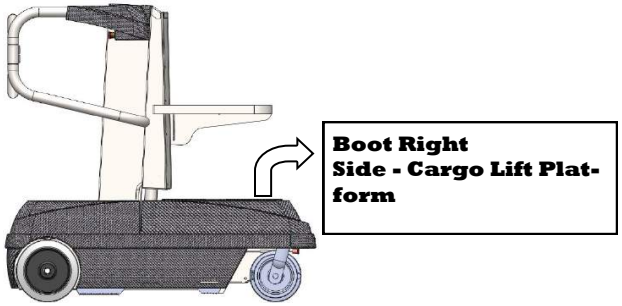

ATTENTION

THE BOOT (TRANSPORT PLATFORM) MUST BE USED EXCLUSIVELY FOR CARGO MATERIALS.
PREVENT TRANSIT OF PERSONNEL ON THE TRANSPORT PLATFORM BOOT.

3.5 BATTERY CHARGING

Battery low voltage alarm warning light

On the LUI MINI S.K. command panels on the platform and the ground station have indicators of low battery voltage.
On LUI MINI P.A. frame section has the indicator of low battery voltage.

Battery charging procedure

This machine is equipped with a battery charger with an AC electrical power input/DC electrical power output. The battery charger stops charging the batteries automatically when they have reached full charge.

NOTE: *When the battery charger is connected to an AC electrical outlet, the platform vehicle transmission is disabled.*

THE LEAD ACID BATTERIES MAY GENERATE EXPLOSIVE HYDROGEN GAS DURING NORMAL OPERATION. KEEP SPARKS, OPEN FLAMES OR LIT TOBACCO AT A SAFE DISTANCE FROM THE BATTERIES. DURING BATTERY CHARGING PROVIDE FOR ADEQUATE VENTILATION IN THE AREA. DO NOT CHARGE A FROZEN BATTERY. CAREFULLY STUDY THE PRECAUTIONS SPECIFIED BY THE BATTERY MANUFACTURER RELATIVE TO THE SPEED OF CHARGING RECOMMENDED AS WELL AS THE POSSIBILITY OF REMOVAL OF THE CELL CAPS DURING CHARGING.

1. Park the vehicle in a well ventilated area near an AC wall socket.

2. Always use a grounded (earthed) AC socket. Connect the battery charger to a correctly installed AC socket with ground connection according to all of the local regulations in force. The grounded socket is necessary so as to reduce the risk of electrical shocks - do not use grounded adapters and do not modify the plug. If an extension is used, avoid excessive drops in voltage by using the 3 wire 12 AWG type.

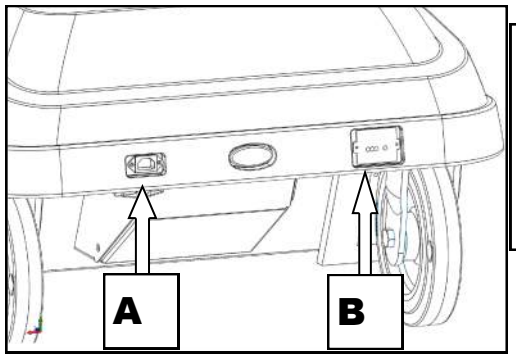

A - A.C. POWER INPUT FOR THE BATTERY CHARGER
B - CHARGE STATUS WARNING LIGHT FOR THE BATTERY CHARGER

LUI MINI S.K.

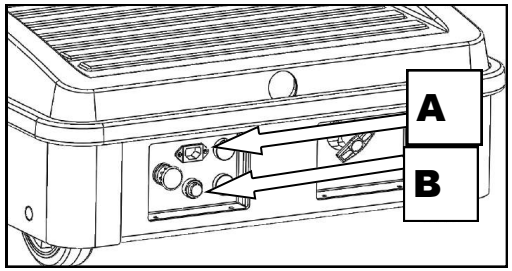

LUI MINI P.A.

The charge status warning lights for the batteries are located near the AC power input on the battery charger, on the chassis.

1. Upon the first connection, automatically, the battery charger LED start to blink for few seconds and performs a brief LED test, then the charging begins.

2. When the GREEN LED lights up, the batteries are charged. At this point, it is possible to disconnect the battery charger from their AC mains power supply. (grasp the plug and pull it out from the wall outlet. Do not pull on the cord so as to not damage it.)

NOTE: When green LED is on the battery charger is switched off automatically

3.6 PLATFORM COMMAND CONSOLE OPERATION

3.6.1 LUI MINI S.K.

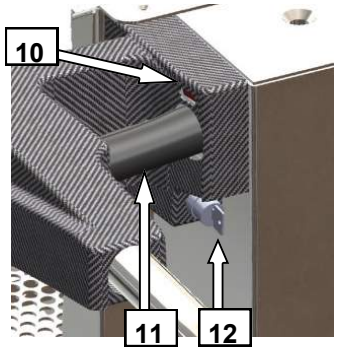

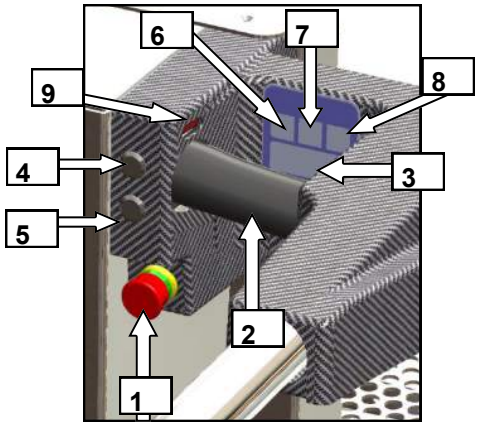

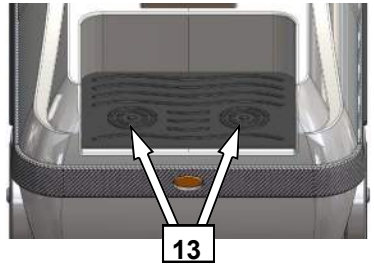

1. Emergency Stop Button
2. Throttle Handle
3. Battery Gauge
4. Raise Platform Button
5. Lower Platform Button
6. Horn Button
7. Lower Cargo Platform Button
8. Raise Cargo Platform Button
9. Right hand Dead Man sensor
10. Left hand Dead Man sensor
11. Steering Rocker Switch
12. Key Switch Selector
13. Foot switches

General Information

Before activating the machine by way of the commands on the ground or those on the platform, it is necessary to satisfy the following command conditions:

- Platform Command Panel : the key switch must be set to the Platform Command Mode or Ground Command Mode.
- Ground Command Station -Platform Command Station: the emergency stop buttons must be in RESET position (POWER SUPPLY CONNECTED).

Key switch platform/switch off/ground

- **Central Position "0":**
  Rotate into this position to turn the machine off after use.
- **Position "1":**
  (platform battery gauge will light up only for LUI MINI S.K.). In this position, the machine can be actuated from the Platform Command Station.
- **Position "2":**
  (platform battery gauge will show GRD only for LUI MINI S.K.). In this position, the machine can be actuated from the Ground Command Station.

Platform Emergency Stop Button

Pushed immediately stop all the operational phases of the machine.
Reset **DOES NOT** actuate the machine, but enable the command devices
NOTE:
For manoeuvring the machine it is necessary that the emergency stop buttons on the ground command station and on the platform need to be turned to the RESET position.

Left and Right Hand Dead Man Sensor
Left and Right hand must be placed on the handles, in front of the sensor to allow the activation of the driving/raise/lower functions of the machine.

NOTE: Remember to activate, besides the left and right hand sensors, also both the foot switches, so as to enable all the machine functions: driving/ raising /lowering.

Throttle Handle

Grasp the handle in the right hand and

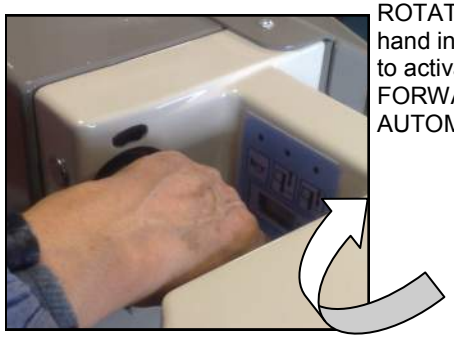

ROTATE the handle FORWARD (back of the hand in the direction opposite to the operator) to activate the movement of the vehicle in FORWARD GEAR. The release of the handle AUTOMATICALLY stop the machine.

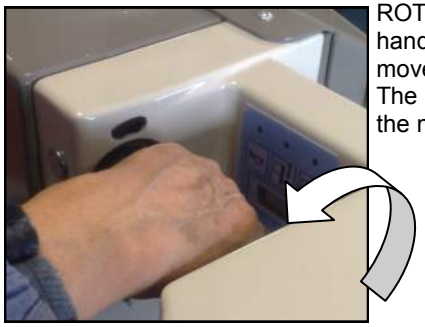

ROTATE the handle BACKWARD (back of the hand in direction of the operator) to activate the movement of the vehicle in REVERSE GEAR. The release of the handle AUTOMATICALLY stop the machine.

ATTENTION

Operation of the platform is exclusively limited to personnel who have been previously trained and authorised and who have thoroughly read and understand the safety indications of this manual.
DRIVE ONLY ON A SMOOTH, SOLID AND HORIZONTAL SURFACE that is clean, free of holes and of a suitable consistency, able to support the weight of the machine and the weight of what the vehicle can transport. (See Section 5 Machine Technical Specifications)

Raise/Lower Cargo Platform Button

The cargo material compartment has been designed for a maximum load of 90 kg (199 lb). It may be rapidly raised or lowered vertically on the front part of the elevator group using the relative buttons on the machine.

Push and hold down the upper button (Button 8 section 3.6) to activate the electrical lifting of the cargo platform. Release of the button automatically stop its movement.

Push and hold down the lower button (Button 7 section 3.6) to activate the lowering of the cargo platform. Release of the button automatically stop its movement.

Acoustic Signal Device Button

When the machine is turned on, the pressure on this button determines the activation of the acoustic signal device.

Platform Raising and Lowering Buttons

ATTENTION

The operator must not for any reason climb up on top of the basket railings, nor place ladders or other things there, in order to achieve greater heights at which to work. In addition, he or she must never lean out or extend him/her self outside of the railing of the platform basket.

Before activating the machine, verify that:

- the platform is positioned on a clean pavement, free of holes, levelled, of an adequate consistency,
- where there are no aerial obstacles in the zone where work is to be done

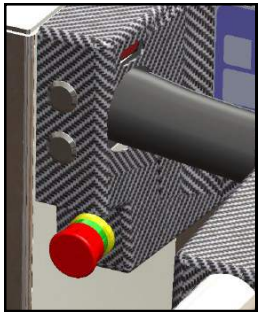

Push and hold down the lift button (Button 4 section 3.6) to activate the electrical raising of the basket platform. Release of the button automatically stop its movement.

Push and hold down the lowering button (Button 5 section 3.6) to activate the lowering of the basket platform. Release of the button automatically stop its movement.

Steering Rocker Switch

The Steering has been designed to be easily activated with the left hand.

Push the Steering switch left toward the right or the left or the right and hold it in this position as long as one desires that the direction chosen be maintained.
Remember to activate both of the foot switches and the left and right hand sensors to actuate the raising/lowering/driving functions.

The steering of the machine on its axis is allowed only using the Steering Rocker Switch to the left or to the right .
Use both Rocker Switch and Throttle handle to actuate the driving of the machine in the direction desired.

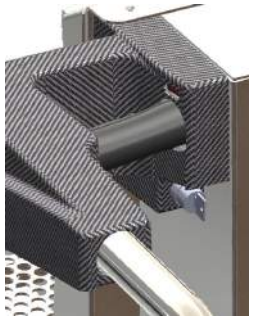

1. Push and hold the selector toward the **Right**, to activate the direction to the right. Release the selector if only backwards and forwards movement is desired.

   a. Activating the throttle handle in **FORWARD GEAR**, the machine will move forward, turning to the right (the front of the vehicle toward the right of the operator)
   b. Activating the throttle handle in **REVERSE GEAR** , the machine will move backward, turning to the right (the front of the vehicle toward the right of the operator)

2. Push and hold the selector toward the **Left**, to activate the direction to the left. Release the selector if only backwards and forwards movement is desired.

   a. Activating the throttle handle in **FORWARD GEAR** , the machine will move forward, turning to the right (the front of the vehicle to ward the right of the operator)

   b. Activating the throttle handle in **REVERSE GEAR** , the machine will move backward, turning to the left (the front of the vehicle toward the left of the operator)

NOTE: THE STEERING ROCKER SWITCH AND THE THROTTLE HANDLE MUST BE ACTIVATED AT THE SAME TIME IN ORDER FOR THE VEHICLE TO MOVE IN THE DIRECTION SELECTED. FOR THE MOVEMENT OF THE MACHINE FORWARD/ BACKWARD IN A STRAIGHT LINE, POSITION THE VEHICLE IN THE DIRECTION DESIRED AND MOVE BACKWARDS OR FORWARDS ONLY ACTIVATING THE THROTTLE HANDLE.

Footswitches

DO NOT PLACE THE FOOT ON THE FOOT SWITCHES BEFORE TURNING THE KEY SELECTOR FROM “0” TO “1” OR “2” ACTIVATION OF COMMANDS DIFFERENT FROM THE KEY SWITCH TURN ON / TURN OFF OR THE RESET OF THE EMERGENCY STOP SWITCHES DURING THE START UP OF THE VEHICLE WILL CAUSE THE DISPLAY OF AN ERROR.

In the cage there are two foot switches, activated with the heels, which guarantee the stable positioning of the operator without limiting his or her comfort.
Removing one foot from one of the two switches, all of the functions of the machine, raising, lowering and running, are disabled immediately.

NOTE: Remember to activate, besides both of the footswitches also the left and right hand sensors, (Section 3.6), so as to enable all of the machine functions: driving/raising /lowering.

Slope Alarm

LUI MINI S.K. INCLUDES A SLOPE ALARM .
IF THIS ALARM IS ACTIVATED AN ACOUSTIC SIGNAL IS EMITTED AND IT IS NOT POSSIBLE TO RISE AND OR DRIVE THE PLATFORM. THE TILT CONDITION REMAIN UNTIL THE PLATFORM IS NOT COMPLETELY LOWERED AND THE SLOPE CONDITION HAS BEEN ELIMINATED.

3.6.2 LUI MINI P.A.

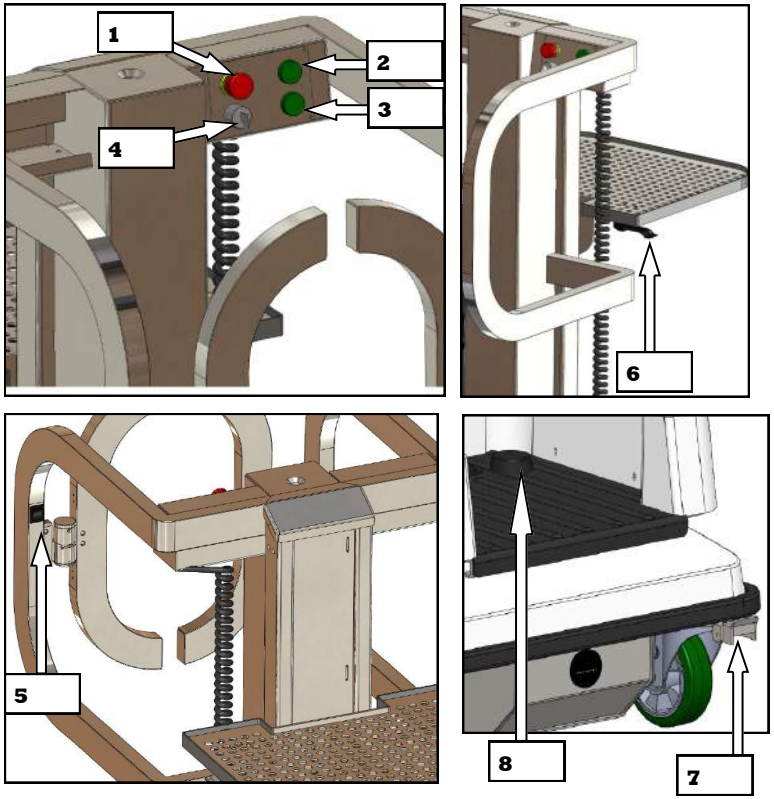

1. Emergency Stop Button
2. Raise Platform Button
3. Lower Platform Button
4. Key Switch
5. Auto braking on fixed castor release button
6. Raise and lower Cargo Platform Lever
7. Pedal lever
8. Footswitch

Platform Emergency Stop Button

Pushed, immediately stops all the phases of the machine.
Reset **DOES NOT** actuate the machine, but enable the command devices

NOTE:
In order to move the machine is necessary that the emergency stop buttons on the ground command station and on the platform need to be turned to the RESET position.

ATTENTION

Platform Raising and Lowering Buttons

The operator must not for any reason climb up on top of the basket railings, nor place ladders or other things there in order to achieve greater heights at which to work. In addition, he or she must never lean out or extend him/her self outside of the railing of the platform basket.

Before activating the machine, verify that:

- the machine is positioned on a clean floor, free of holes, levelled, of an adequate consistency,
- where there are no aerial obstacles in the zone where work is to be done

Push and hold down the lift button 2 to activate the electrical rising of the cage platform. Release of the button automatically stop its movement.

Push and hold down the lowering button 3 to activate the lowering of the cage platform. Release of the button automatically stop its movement.

Auto Braking on Fixed Castor Release Button

Push and hold the button 5 to release the auto braking on fixed castor since the desired position of the LUI MINI P.A. has been reached.
Release of the button immediately engage the auto braking on fixed castor system.

NOTE:
The function of the auto braking on fixed castor release button is available only when the key selector is switched on platform command mode "1" and the basket is completely lowered.

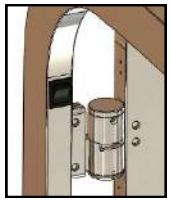

Raise/Lower Cargo Platform Lever

The cargo material compartment has been designed for a maximum load of 90 kg (199 lb). It may be rapidly raised or lowered vertically on the front part of the elevator group using the relative lever underneath the cargo shelf

Push and hold the lever 5 and lift up with both hands the cargo shelf for raise the cargo platform. Release of the lever automatically stops its movement.

Push and hold the lever 5 and lift down with both hands the cargo shelf for lower the cargo platform.
Release of the lever automatically stops its movement.

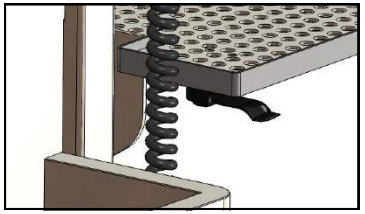

Pedal Lever

Use this lever in order to push the machine only on a straight line

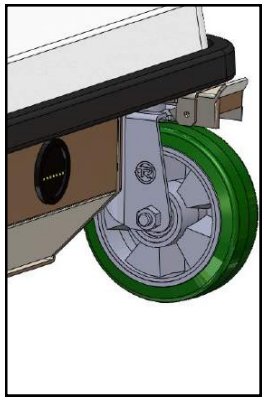

Slope Alarm

LUI MINI P.A. INCLUDES A SLOPE ALARM .
IF THIS ALARM IS ACTIVATED AN ACOUSTIC SIGNAL IS EMITTED AND IT IS NOT POSSIBLE TO RISE THE PLATFORM. THE TILT CONDITION REMAIN UNTIL THE PLATFORM IS NOT COMPLETELY LOWERED AND THE SLOPE CONDITION HAS BEEN ELIMINATED.

3.7 GROUND COMMAND PANEL

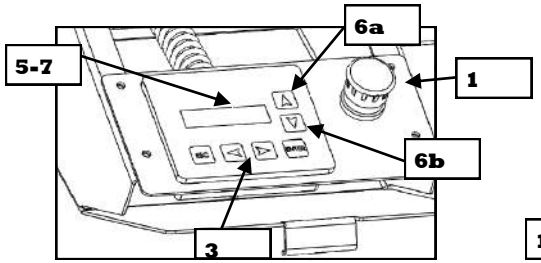

LUI MINI S.K.

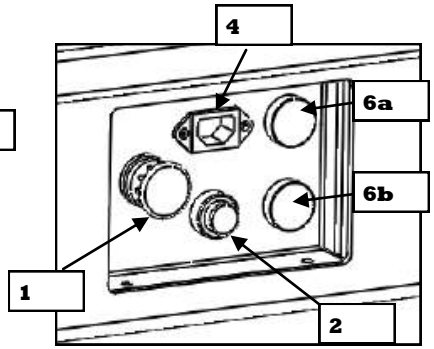

LUI MINI P.A.

For LUI MINI S.K. the panel is found under the cover, in an extractable fold-away drawer, and is made up of the following components;
For LUI MINI P.A. the panel is in the front of the chassis, with their relative functions;

1. Emergency Stop Button
2. Battery charger indicator
3. Multifunction Button Group
4. Battery Charger socket
5. LCD display
6. Up(6a) and down(6b) lifting push buttons basket
7. Battery gauge

Emergency stop button

Pushed immediately stops all the operational phases of the machine.
Reset **DOES NOT** actuate the machine, but enable the command devices.

Display(for LUI MINI S.K.)

This is the principle control display system on LUI MINI S.K..

- It visualises useful information on the status of the system
- It gives diagnostic information on eventual anomalies or faults in the system.

Multifunction Button Group:

All of the arrow buttons are enabled only when the keyed selector switch is turned to the **Ground Command mode.**

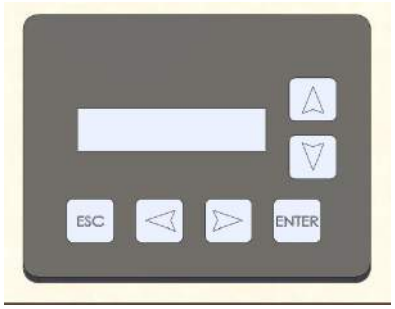

- **The ESC button is used for the programming of the electronic hard-ware and MUST BE used only by a specialised BRAVI technician.**

- Pushing and holding down the **up arrow button**, the raising of the bas-ket is actuated. RELEASE TO INTERRUPT THE ELEVATION OF THE BASKET.

- Pushing and holding down the **low arrow button,** the lowering of the basket is actuated.
  RELEASE TO STOP THE DESCENT OF THE BASKET.

- Pushing both buttons, **left and right arrows,**
  SIMULTANEOUSLY activates **the release of the brakes.**

The brakes may be released when there is the need to manually move the platform by pushing it.
For the manual release of the brakes, it is necessary that the machine is **TURNED ON GROUND COMMAND MODE and the basket is completely lowered.**

NOTE: if the battery charge becomes completely depleted in the machine, it is not possible to manually release the brakes.

ATTENTION

RELEASE THE BRAKES MANUALLY ONLY IF THE MACHINE IS ON A HORIZONTAL SURFACE AND IT IS COMPLETELY LOCKED.
The operator MUST make sure that in the hazard zone, there are no persons exposed or obstacles.

Ground Control Station (LUI MINI S.K.):

At power-up and during operation the LCD display on the ground Control Module displays the current machine operating status. The following information is communicated:

1)Hours represent the working hours of the machine
2)BCI represent the battery charge express in percentage

If fault occurs a small description of the fault is showed in the display

Basket Control Station (LUI MINI S.K.):

At power-up and during operation the battery gauge display shows the current machine operating status. The following information is communicated:

1)BCI represent the battery charge express in percentage
2)RED dot when the platform is elevated

If fault occurs an error code of the fault is showed in the display

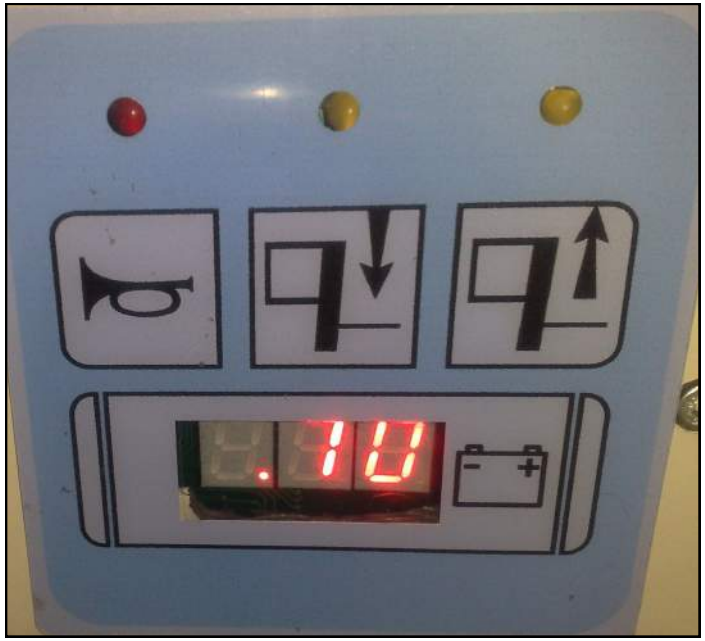

Display (LUI MINI P.A.)

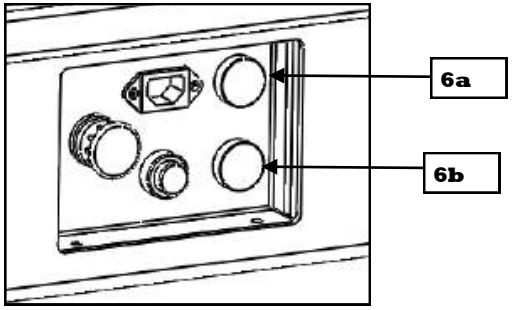

6a Pushing and holding down **the upper button,** the raising of the basket is actuated.
RELEASE TO STOP THE RAISING OF THE BASKET.
6b Pushing and holding down **the lower button,** the lowering of the basket is actuated.
RELEASE TO STOP THE DESCENT OF THE BASKET.

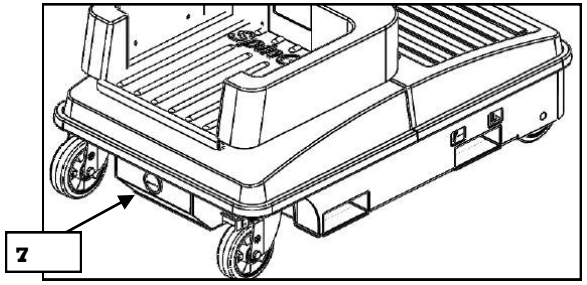

Battery gauge (for LUI MINI P.A.)

It shows the battery charge status. When red LED is on the raising of the basket is not allowed and the battery need to be charged.

NOTE:SWITCHING OFF THE MACHINE WHEN NOT IN USE WOULD INCREASE THE BATTERY LIFE

3.8 MANUAL DESCENDING EMERGENCY LEVER

ATTENTION

CRUSHING HAZARD

During the following operations and after having performed all of the procedures for the emergency descent, the operator must pay great attention to leaving the area and making sure that no other person, animal or thing is within range or may come into range of the movement for a distance of at least 2 metres (6.56ft) and above all that there are no other obstacles on top of the plastic cover and the space that is specifically for the reception of the basket in its descent phase.

The manual descending emergency lever allows the personnel on the ground to lower the platform in the event that the operator of the same is unable to do so after it has been elevated.
The emergency lever is indicated by its relative adhesive sticker .

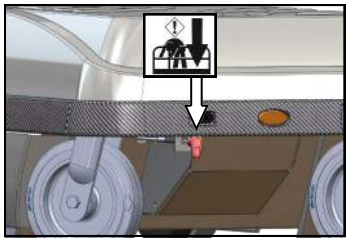

LUI MINI S.K.

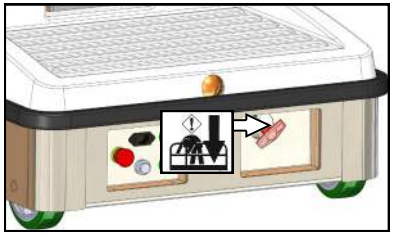

LUI MINI P.A.

To lower the platform manually it is sufficient to pull the lever. In this manner the basket will begin to descend very slowly.

RELEASE the lever to stop the descent of the platform.

3.9 PLATFORM CONFIGURATION

Platform Maximum Load Capacity

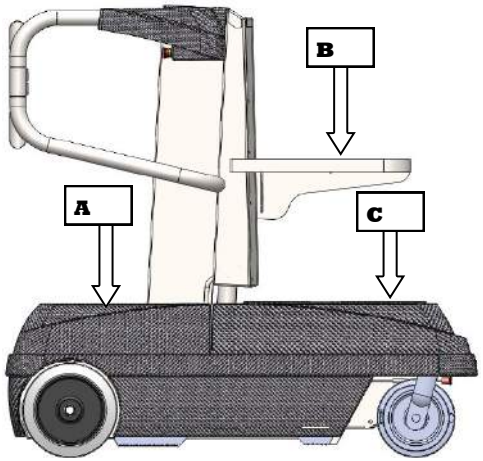

A - LOAD OPERATOR BAY CAPACITY	286.6 lb / 130 kg
B - TRANSPORT HOOD TRAY CAPACITY	198.4 lb / 90 kg
C - MATERIAL TRAY CAPACITY	
for LUI MINI S.K.:	249.12 lb /113 kg
for LUI MINI P.A.:	198.4 lb / 90 kg

3.10 PARKING THE VEHICLE

a. Drive the vehicle to a well sheltered and ventilated area.
b. Make sure that the platform is completely lowered and turn the key switch to “0”.
c. If necessary, remove the key from the platform to avoid that unauthorised persons use the vehicle.

NOTE: If necessary charge the batteries in preparation for the following working day (See Section 3.5)

3.11 TRANSPORT PROCEDURES HOISTING AND TIE DOWN

General Information

The LUI MINI S.K. and LUI MINI P.A. may be transported to the work-place with one of the methods described below:

- Driving the vehicle and completing the journey on the base wheels, the surface to be travelled permitting.

- Moving it with a fork lift truck, positioning the forks in the places indicated, found in the base of the frame.

Transport on a fork lift truck

Position the forks of the truck in the points indicated on the vehicle. This allows the machine to be transported to the work area or to lift it to an upper level by way of a standard fork lift.

NOTE:
The fork lift truck must be capable of sustaining the gross weight of the machine. See the operational technical specifications of the machine, at the beginning of the section.

Transport vehicle - tie down strapping

With the machine turned off on the transport vehicle in position for tie down *(brakes set)*, follow the directions indicated for tying it down during transport.

IF EXCESSIVE FORCE IS EXERTED WHEN TYING DOWN THE VEHICLE (LOAD ON THE WHEELS) COMPONENTS OF THE REAR DRIVE WHEELS OR OF THE FRONT CASTOR WHEEL ASSEMBLIES MAY BE DAMAGED.

Tie the machine down onto the transport vehicle with suitable strapping, having them run through the railings of the basket and avoiding the entry gate doors.

3.12 ADHESIVE STICKER POSITIONS

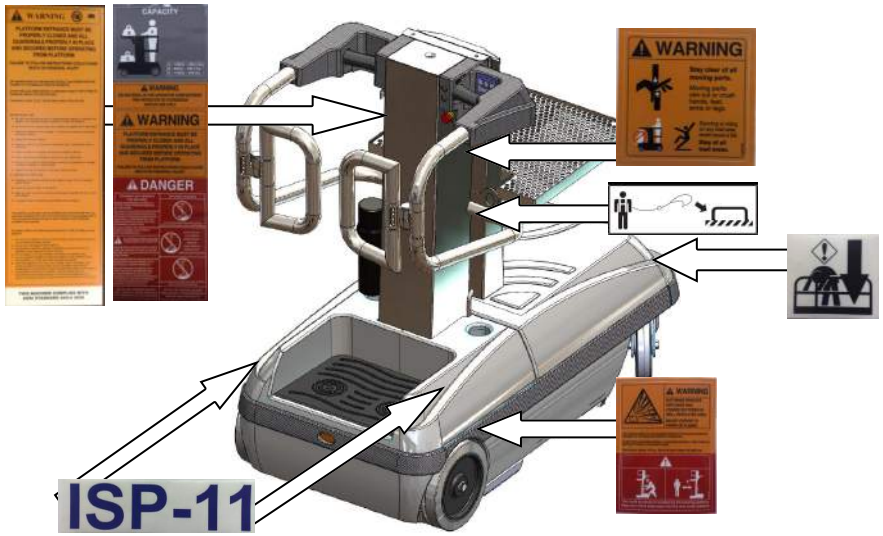

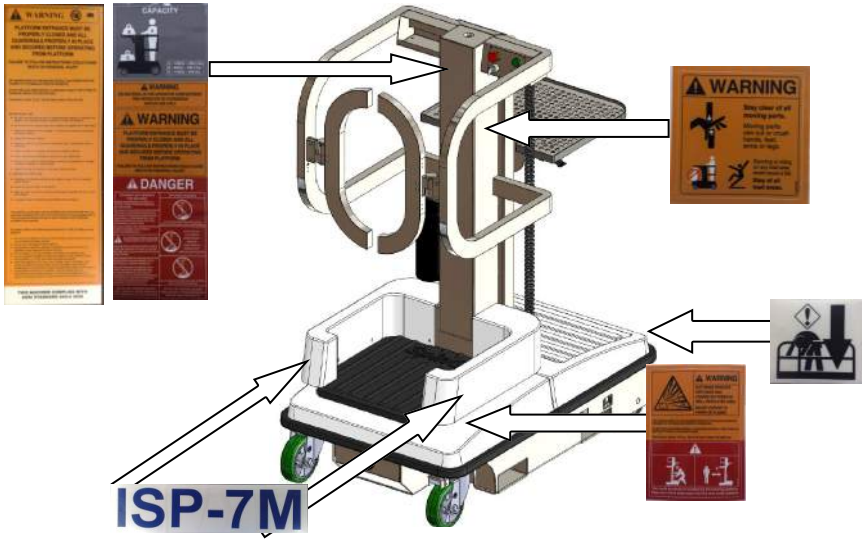

SECTION 4. EMERGENCY PROCEDURES

4.1 EMERGENCY FUNCTIONS

Operator not capable of controlling the machine

CONDITION IN WHICH THE OPERATOR OF THE PLATFORM IS IMMOBILISED, TRAPPED OR UNABLE TO ACTIVATE OR CONTROL THE MACHINE.

1. Other personnel must actuate the machine from the ground command panel only in the event of necessity.

2. The platform commands may be utilised only by qualified personnel present on the platform itself.
   STOP WORK WITH THE MACHINE IF THE COMMAND CONTROLS DO NOT FUNCTION PROPERLY.

3. The recovery equipment may be used to have the occupant of the platform descend from it. It is possible to use cranes or fork lift trucks to stabilise the movement of the machine.

Platform locked in elevated position
If the platform locks up or is stuck in elevated structures or equipment, transfer the people aboard into a safe location before moving the machine.

SECTION 5. GENERAL TECHNICAL SPECIFICATIONS AND OPERATOR MAINTENANCE

5.1 INTRODUCTION

This section of the manual provides further information necessary for the operator so that he or she may tend to the proper operation of the machine and relative maintenance.
Maintenance operations and procedures must be performed by qualified personnel:
- Who have read and perfectly understood the safety indications in the front of this manual (See PART 2)
- Who possess personal safety equipment and use it as needed.
- and with the machine at a zero energy condition(key switch turned to zero and main red connector under the front cover disconnected)

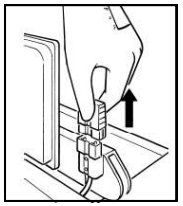

Any procedure not found below is to be considered extraordinary maintenance. Repairs, modifications and extraordinary maintenance may not be performed without previous consultation with the manufacturer, who according to the case, will provide written authorisation to proceed or will suggest the involvement of one of its own service technicians. These precautions are due to the fact that faulty or incorrect procedures may cause anomalous operational conditions, damage for the platform and risks for personnel. All responsibility, as pertains to such operations, is therefore declined. Before putting the machine back into service, check and verify the entire system in accordance with the start up procedures. Lack of observance of these precautions may cause harm to persons and damage to the machine.

In this section, the part relative to maintenance contains information aimed at assisting the machine operator only in the performance of daily maintenance procedures. Therefore, this part does not substitute the more in depth preventative maintenance and inspection program contained in the maintenance and procedure manual reserved exclusively for specialised technicians.

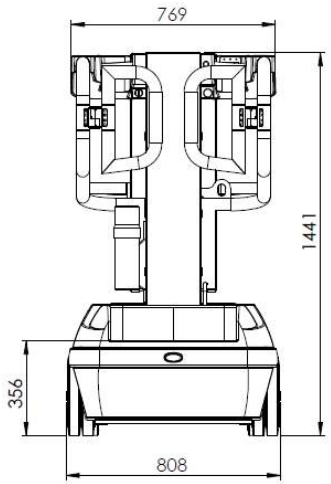
769
1441
356
808

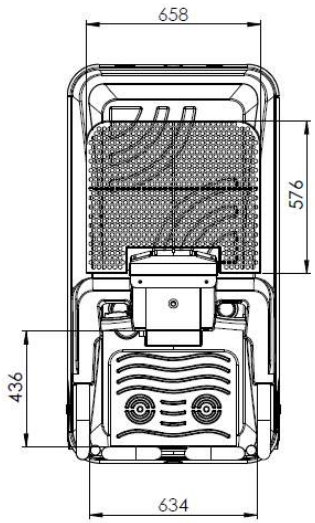
658
576
436
634

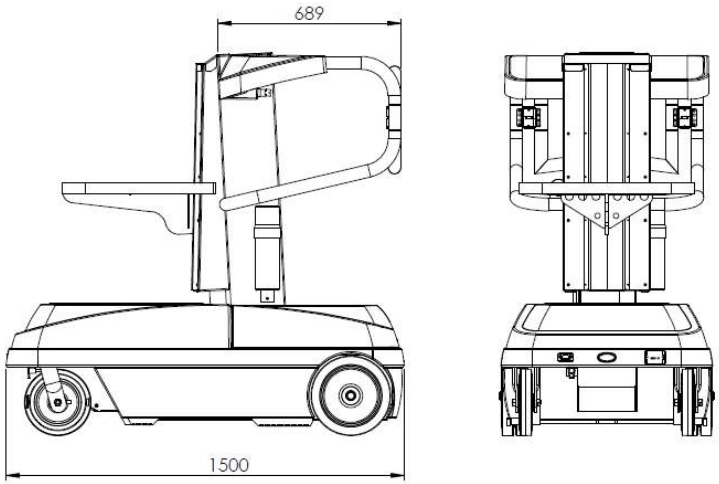
689
1500

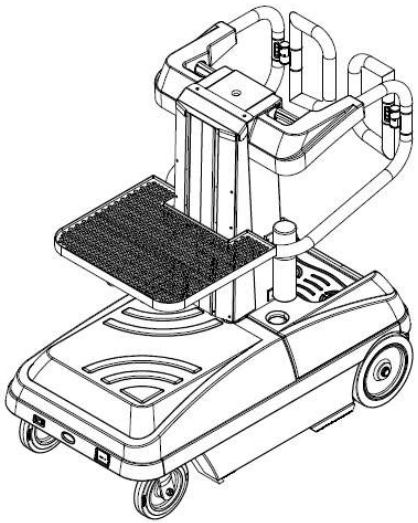

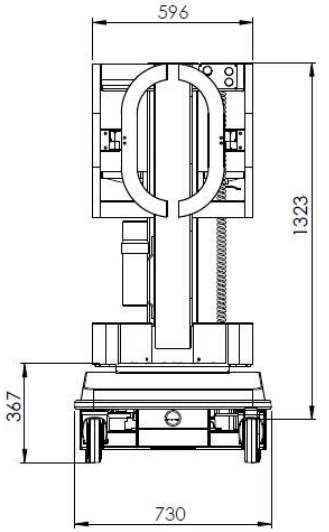
596
1323
367
730

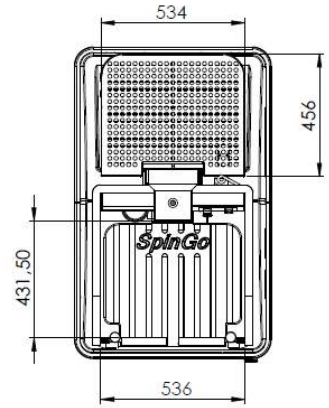
534
456
SpinGo
431,50
536

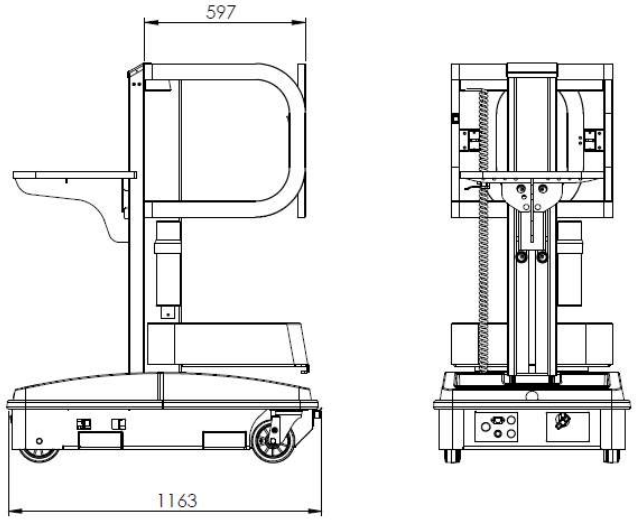
597
1163

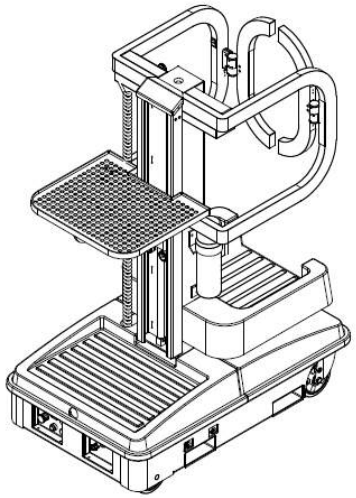

TECHNICAL SPECIFICATIONS LUI MINI S.K.	
Maximum speed	5,19 ft/s(95 m/min)
Turning Radius (Internal)	ZERO
Maximum Slope Practicable (EXCLUSIVELY WITH PLATFORM COMPLETELY LOWERED)	35%
Platform Cycle Performance	Raising 18 sec
	Lowering 14 sec
Drive System	Two Hand Proportional
Tyres	Anti-Skid Solid Rubber
Electronic Slope Control	Standard
Load on Wheel	661 lb/300Kg
LOAD CAPACITIES	
LOAD CAPACITY OPERATOR COMPARTMENT	286.6 lb/130Kg
BOOT PLATFORM LOAD CAPACITY	249.13lb /113 Kg
CARGO ELEVATOR LOAD CAPACITY	198.4 lb/90 Kg
POWER SUPPLY	
Batteries	N 04, 6V 245Ah@20hr
POWER SUPPLY	24 V c.c.
Recharge lines power supply	110 V AC 60Hz/220 V AC 50 Hz.
NOISE LEVELS	***Less than 70 dB (A)***

Operational height	17.55 ft/535 cm
Platform Height (Elevator Completely Extended)	10.99ft/335cm
Platform Height (Platform in Completely Lowered Rest Position)	4.72 ft/144cm
Machine Length (Total)	5.11 ft/150cm
Machine Width (Total)	2.65 ft/80.8 cm
Occupants: (persons permitted on the platform)	1
Platform Entry Height	1.19 ft/36 cm
Machine Gross Weight (Vehicle Empty)	1433 lb/660 kg
Max wind speed	0mph(0 m/s)

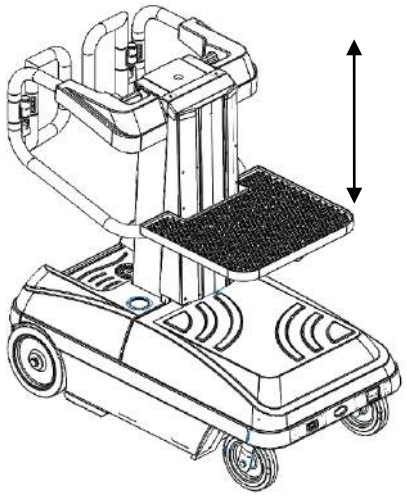

1.65 ft/50 cm

TECHNICAL SPECIFICATIONS LUI MINI P.A.	
Turning Radius (Internal)	ZERO
Platform Cycle Performance	Raising 18 sec
	Lowering 15 sec
Tyres	Anti-Skid polyurethane
Electronic Slope Control	Standard
Load on Wheel	462lb/210Kg
LOAD CAPACITIES	
LOAD CAPACITY OPERATOR COMPARTMENT	286.6 lb/130Kg
BOOT PLATFORM LOAD CAPACITY	198.4 lb/90 Kg
CARGO ELEVATOR LOAD CAPACITY	198.4 lb/90 Kg
POWER SUPPLY	
Batteries	N 01, 12V 85Ah@20hr
POWER SUPPLY	12 V c.c.
Recharge lines power supply	110 V AC 60Hz/220 V AC 50 Hz.
NOISE LEVELS	***Less than 70 dB (A)***

Operational height	13.6 ft/416 cm
Platform Height (Elevator Completely Extended)	7 ft/216cm
Platform Height (Platform in Completely Lowered Rest Position)	4.85 ft/148cm
Machine Length (Total)	3.77 ft/115cm
Machine Width (Total)	2.39 ft/73 cm
Occupants: (persons permitted on the platform; interior use only)	1
Platform Entry Height	1.19 ft/36 cm
Machine Gross Weight (Vehicle Empty)	617 lb/280 kg
INTERNAL USE ONLY	

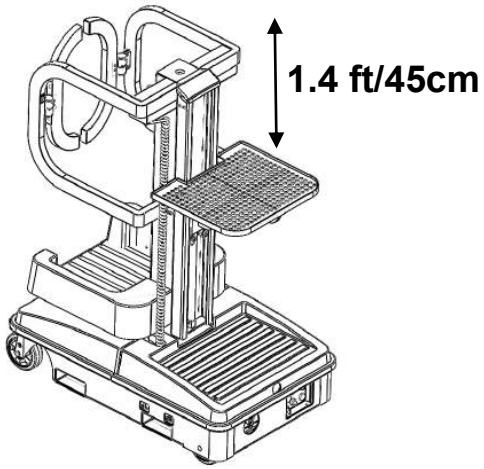

5.2 Weight of the Machine Components
Supplemental Information (ONLY FOR CE MACHINES)

COMPONENT	WEIGHT
Batteries (LUI MINI S.K.)	66.13 lb each/30 kg 1pcs - 264.55 lb total/120 kg total
Batteries (LUI MINI P.A.)	46 lb /21 kg
Boot Removable (LUI MINI S.K.)	27.99 lb/12,70 kg
Boots Removable (LUI MINI P.A)	3.7 lb each/1,7 kg 1pcs 7.5 lb total /3,5 kg total

The following information is provided in accordance with the requirements of the European Machinery Directive 2006/42/EC and is only applicable to CE machines.

As specified in the above chart, the equivalent continuous A-Weighted sound pressure level at the work platform is less than 70dB(A).

The vibration total value to which the hand-arm system is subjected does not exceed 2,5m/s2. The highest root mean square value of weighted acceleration to which the whole body is subjected does not exceed 0,5 m/s2.

Location of the serial numbers

In order to identify it, the machine has a tag on which the serial number has been engraved. The tag is located on board the machine, on the right or left of the column.

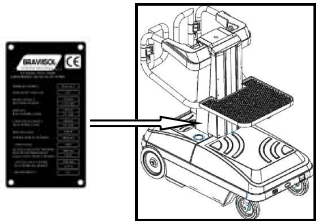

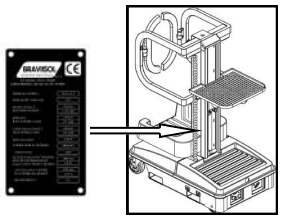

5.3 MAINTENANCE TO BE PERFORMED BY THE OPERATOR

5.3.1 Hydraulic oil top up

The level of the hydraulic oil is to be checked **with the machine having the basket lowered,** from the sight glass found under the cover.
If necessary, top up as follows:

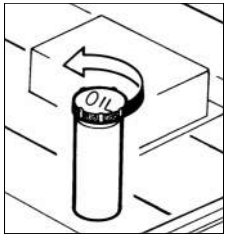

- Unscrew the hydraulic oil fill cap.
- Top up with a mineral oil with a viscosity index of 22 (for climactic conditions with very cold temperatures
  that is, below -20°C, the use of mineral oil with a lower freezing point , about –45°C, is recommended.
- Check and verify the oil level from the sight glass provided. If necessary top up again.
- Tighten down the filler cap well.

Attention - Pollution Hazard
Do not dispose the oil in the environment .

5.3.2 Battery Inspection and Maintenance Procedures

BEFORE PERFORMING ANY PROCEDURES ON THE BATTERIES, **disconnect the main red connector under the front cover.**

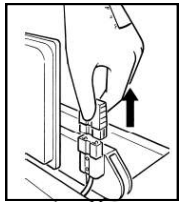

Inspection Battery Terminals

If during the inspection of the battery terminal connectors on the machine, oxidation or grime build-up is found, proceed as follows:

- Disconnect the terminal connectors and clean them with a rag, wet with water. If the oxidation layer is particularly thick, brush off the top layer and clean them with a rag wet with water.

- Dry the terminal connectors well
- Put the connectors back in their place, paying close attention to the correct positive/ negative pole connection, then tighten well.
- Coat the terminal connectors with a protective lubricant for electrical contacts (such as a lubricant with a Pharmaceutical Vaseline oil base).

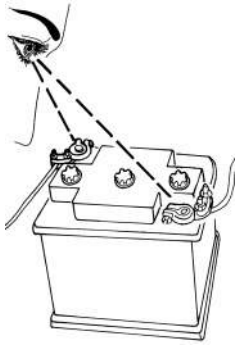

Battery Water Inspection

The battery water level is to be performed every 4 working days or AFTER each and every battery recharge.
It is possible to check the levels by lifting the cover.

The water level must always be at least 5 mm above the internal element plates. If necessary, top up the level with demineralised water.

Given that part of the water evaporates during recharging it is necessary to check the level again after 30 minutes of work.

Perform the job for 30 minutes, and then repeat the battery check and top up procedure until the proper level is achieved.

Cleaning of the machine

As the machine works in presence of dusts, it must be daily or whenever it would be necessary clean it.
The person in charge with the cleaning must have read and well understood the safety prescriptions in this manual (section1)
Before each cleaning operation switch off the key switch.
Use a cloth slightly dampened with water to perform the cleaning.

SECTION 6.
INSPECTION AND REPAIR LOG

PRELIMINARY INSPECTIONS BEFORE START UP CHECK-LIST

***MODEL*_____**

***SERIAL NUMBER*_____**

***YEAR OF MANUFACTURE*_____**

	Cleaning – Verify and check for any eventual leaks (oil, hydraulic fluid or battery acid) or for foreign objects on any of the surfaces.
	Signs and Adhesive Stickers Check and verify that all of these are clean and legible. Check that no sign or adhesive is missing. Make sure that any sign or adhesive that is not legible is cleaned or substituted.
	Use and safety manuals – make sure that in the weather resistant compartment all of the following manuals are present: Use and Safety Manual EMI Safety Manual (only for ANSI/CSA specifications) and the ANSI responsibility Manual (only for ANSI/CSA specifications).
	Battery – Charge as needed

DATE ***INSPECTION PERFORMED BY***

_____ ----------

DAILY INSPECTION CHECK-LIST

***MODEL*_____** ***SERIAL NUMBER*_____**

***YEAR OF MANUFACTURE*_____**

	Make sure that all of the manuals are in their weather resistant container on board the machine.
	Make sure that the tag with the serial number of the platform as well as all of the adhesive safety stickers are in their place, perfectly integral and legible.
	Inspect the machine in order to ascertain the absence of anomalies, faults, welding cracks or malfunctions or any damage or unauthorised changes to the machine, with respect to how it was delivered by the manufacturer.
	Check and verify the basket, the platform railings, check that the entry gate functions properly and that is closes completely and automatically.
	Check the water level in the batteries and make sure that there are no leaks. The cables must be correctly connected to the terminals. There must not be any corrosion on them.
	Check and verify by testing that all of the safety and personal protection devices function properly.
	Check and verify that the tires show no damage, abrasions or deep cuts. Check and verify that there are no debris attached to or around the tires and wheels.
	Visually inspect the hydraulic, electrical and mechanical components. For each component make sure that all of its parts are present, not loosened and fixed solidly in their respective positions and that there are no visible leaks, signs of excessive wear or damaged areas.
	Check and verify that there are no wires or cables that have come loose and hang from the underside of the vehicle.
	Check and verify the correct operation of the key main selector on the dashboard.
	Check and verify the operation of the emergency stop buttons: that found on the command panel on the side the machine and that on the dashboard control panel.
	Check and verify by testing the proper operation of the mechanical emegency descent system.

DATE ***INSPECTON PERFORMED BY***

_____ **----------**

ANNUAL INSPECTION CHECK-LIST

Date:
Serial Number:
Model:
Date last inspection :
Date placed into Service

Customer:
Address:
City/State/ZIP code:
Phone:
Contact Name:

Dealer:
Address:
City/State/ZIP code:
Phone:
Contact Name:

DECAL	
Legibility	
Loading Capacity clearly marked	
Correct Position	
Quantity	
PLATFORM RAILS	
Entry Gate closes properly	
Weather Resistant container for Manuals on board the machine	
Manuals into the container	
Proper Weld— no signs of corro-sion or damage	
ELEVATING SYSTEM	
Mast structure	
Lifting movement and speed	
Noise while lifting/Lowering	
Spiral cable passing through the steel tube	
Bolts tight	

ELECTRICAL COMPONENTS	
Ground Module Functioning	
Connectors	
Wires	
Joystick Functioning	
Spiral cable	
Batteries Integrity	
Batteries proper Functioning	
Battery Charger Functioning	
EMERGENCY STOP	
Break all circuit	
CHASSIS	
Bolts tight	
Chassis Proper Weld— no signs of corrosion or damage	
Drive Shaft Fastened	
Front Turning Wheels Secured	

SECTION 7. ERROR CODES

7.1 LUI MINI S.K.

DECRIPTION	ERROR CODE
EVERYTHING OK,	
GROUND MODE ACTIVE!	
STARTUP	
ROTATING	
DRIVING	
LIFTING	
LOWERING	
STEERING	
SELECT DRIVE/LIFT MODE	
CLOSE TRIGGER	
VEHICLE TILTED	
FAULT: BAD P/N	1,1
NOT CALIBRATED	1,1
HEIGHT NOT CALIBRATED	1,1
FUNCTIONS LOCKED - NOT CALIBRATED	1,1
FUNCTIONS LOCKED - TEST MODE SELECTED	2,2
FUNCTIONS LOCKED - POTHOLE	2,2
FUNCTIONS LOCKED - ARMGUARD	2,2
FUNCTIONS LOCKED - OVERLOADED	2,2
FUNCTIONS LOCKED - UNDERLOADED	2,2
FUNCTIONS LOCKED - TOO HIGH	2,2
FUNCTIONS LOCKED - TILTED	2,2
FUNCTIONS LOCKED - EXTERNAL SHUTDOWN	2,2
DRIVE LOCKED - CANNOT STEER	2,2
CHECK GROUND INPUT SWITCHES	2,2
CHECK DRIVE/LIFT SELECT SWITCH	2,2
CHECK JOYSTICK	2,2
RELEASE TRIGGER	2,2
RELEASE GROUND SWITCHES	2,2
RELEASE ROTATE SWITCHES	2,2
RELEASE JOYSTICK SWITCHES	2,2
SHUTDOWN - CHECK EMS SWITCHES	2,1

DECRIPTION	ERROR CODE
FAULT: ENERGIZED VALVE - CHECK P9 WIRING	3,2
FAULT: BAD INTERNAL SAFETY OUTPUT	3,4
DRIVE LOCKED - BRAKING	3,4
MOTOR OVERLOAD	3,4
FAULT: CAPBANK VOLTAGE TOO HIGH - CHECK LINE CONT	3,3
FAULT: VALVE FEEDBACK HIGH - CHECK VALVE WI-RING	3,2
FUNCTIONS LOCKED - BATTERY	4,4
FAULT: BAD INTERNAL 12V	4,3
FAULT: BAD 5V JOYSTICK SUPPLY - CHECK P15-12 WIRING	4,5
FAULT: BAD INTERNAL 5V	4,2
FAULT: BAD TILT SENSOR	4,2
FAULT: BAD INTERNAL SLAVE	4,2
FUNCTIONS LOCKED - TOO HOT	4,2
FAULT: BATTERY VOLTAGE TOO LOW	4,4
FAULT: BATTERY VOLTAGE TOO HIGH	4,4
FAULT: CHECK ELEVATION SWITCH	6,3
FAULT: CAN BUS	6,6
FAULT: MOTOR A SHORT TO HIGH	7,2
FAULT: MOTOR A SHORT TO LOW	7,3
FAULT: MOTOR B SHORT TO HIGH	7,4
FAULT: MOTOR B SHORT TO LOW	7,6
FAULT: MOTOR CONNECTIONS SHORTED	7,5
FAULT: CAPBANK VOLTAGE TOO LOW - CHECK STUD WIRING	7,7
DRIVE LOCKED - CHECK FIELD CURRENT	7,7
SOME BIG BAD PROBLEM	9,9
BRAKES MANUALLY RELEASED	8,2

SECTION 7

7.2 HYDRAULIC SCHEME LUI MINI S.K.

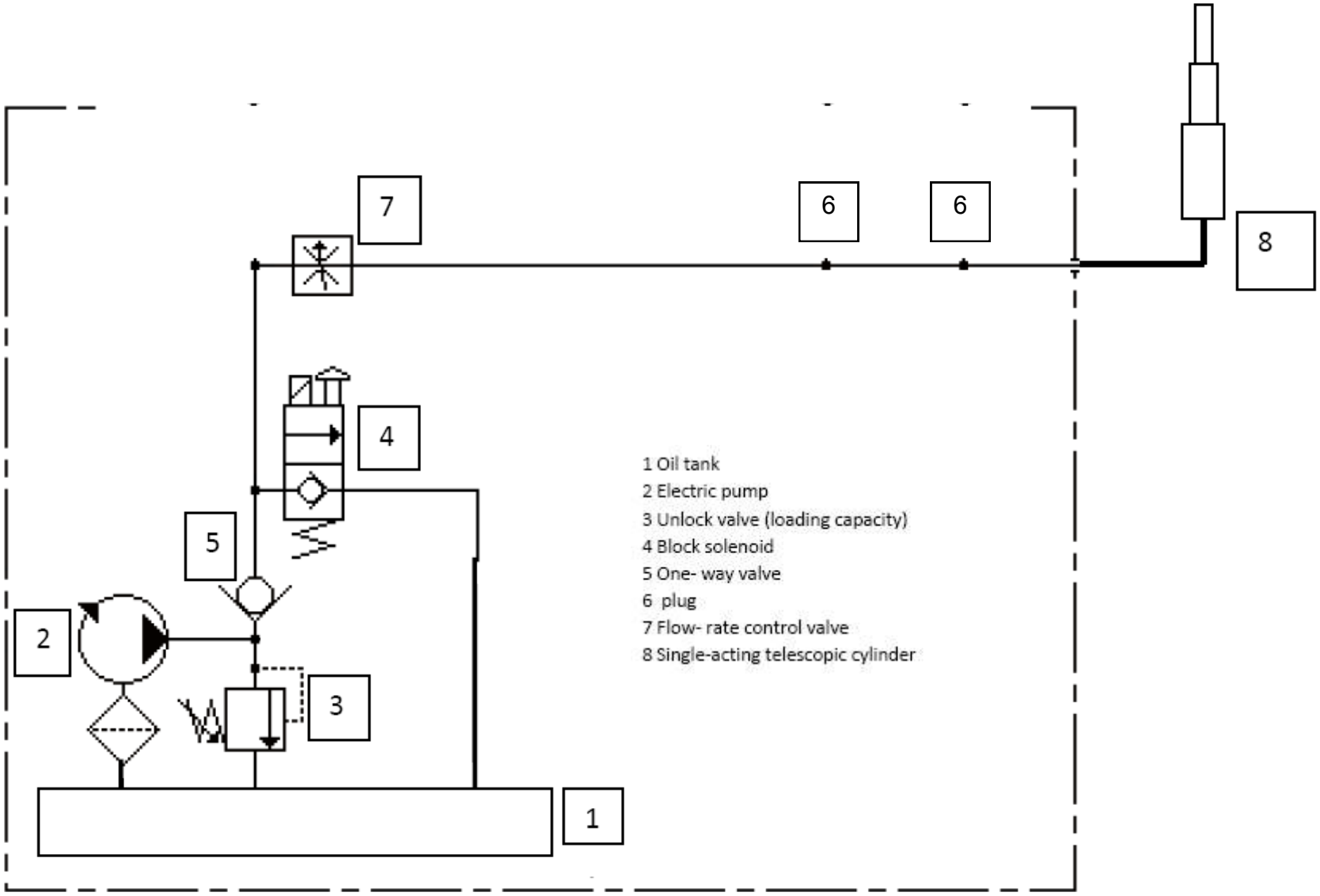

SECTION 7

7.3 HYDRAULIC SCHEME LUI MINI P.A.

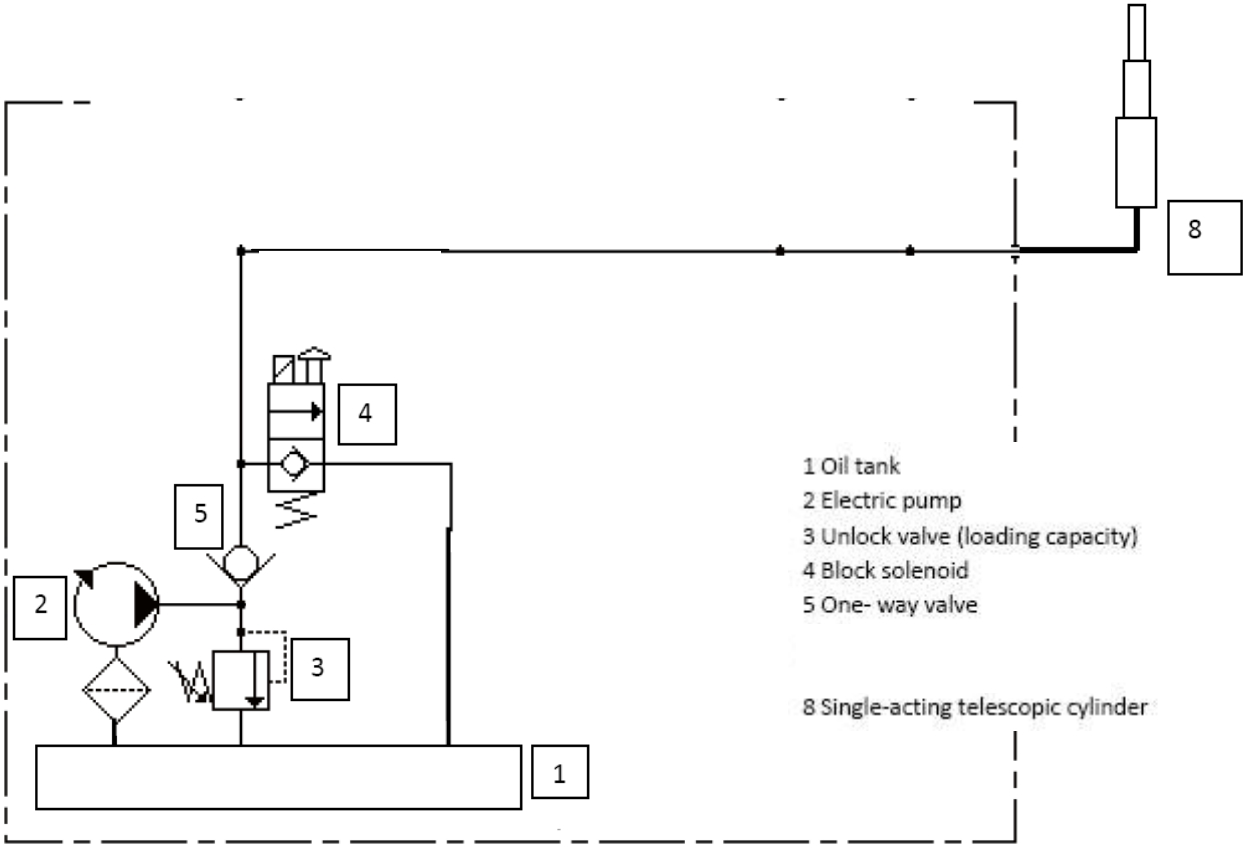

7.4 WIRING DIAGRAM LUI MINI S.K.

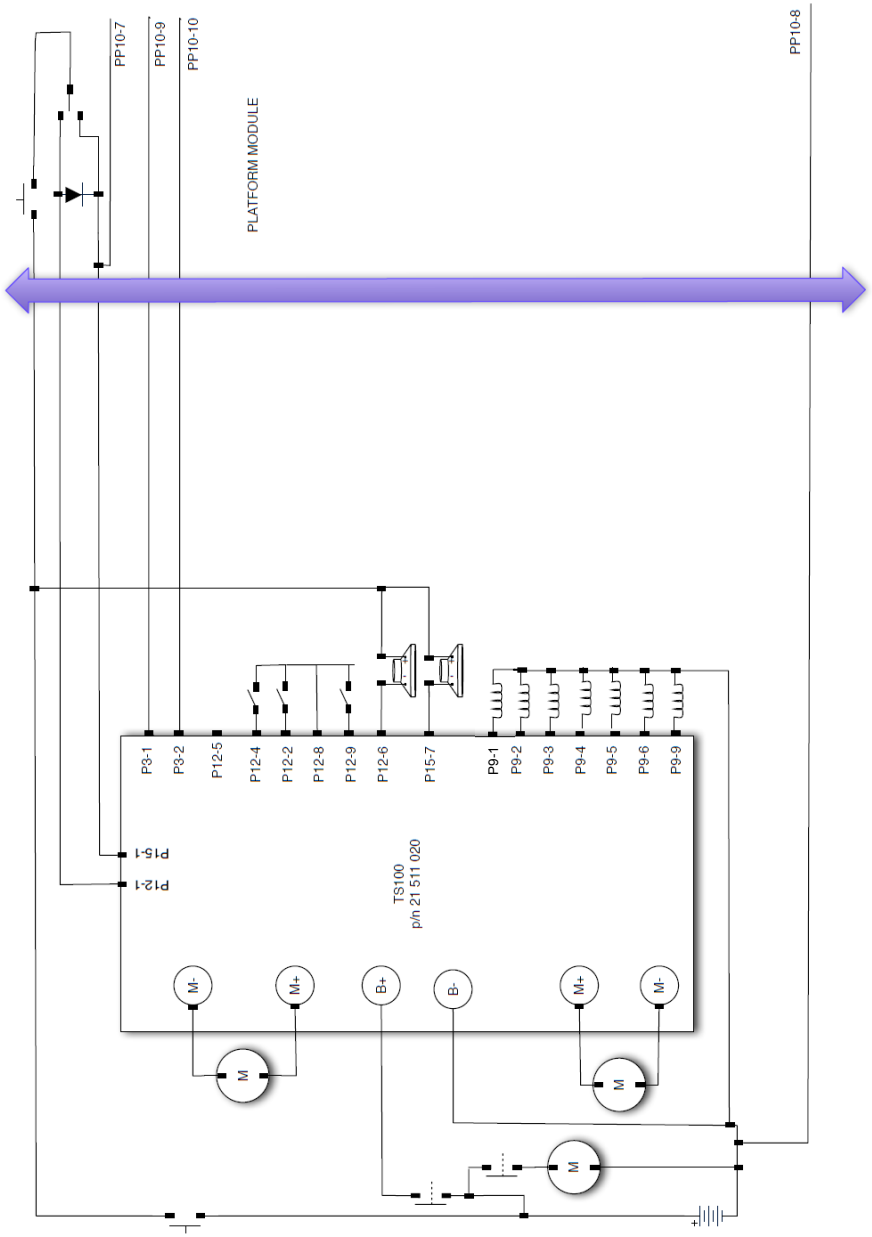

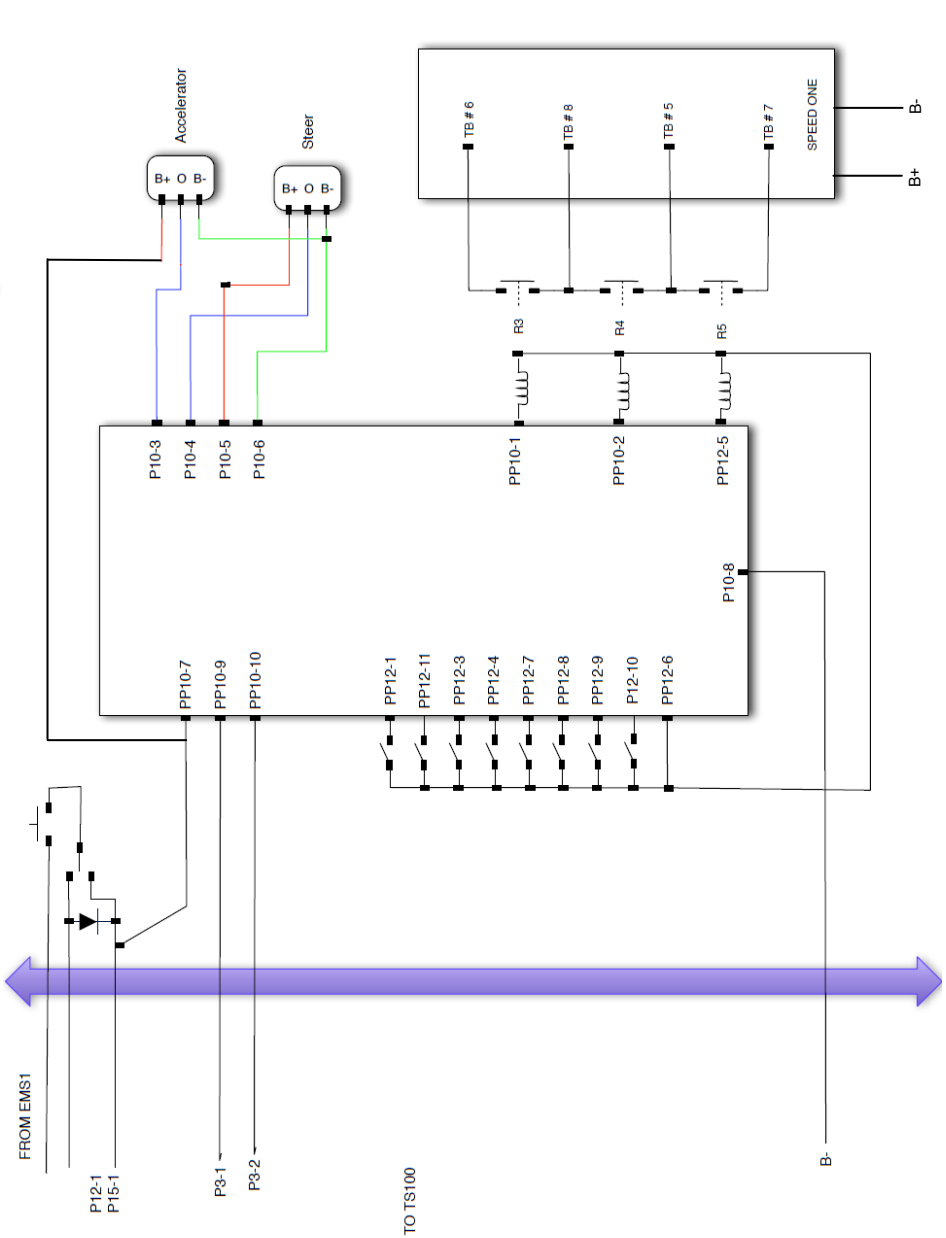

TS100 PIN	DESCRIPTION	INPUT
PCAN-1	CAN1H	TO CAN DISPLAY MODULE (Plat)
PCAN-2	CAN1L	TO CAN DISPLAY MODULE (Plat)
PCAN-3	Shield	
PRS232-1	RS232 B+ supply	
PRS232-2	RS232 Rx	to DIAGNOSTIC CENTER
PRS232-3	RS232 Tx	to DIAGNSOTIC CENTER
PRS232-4	RS232 Gnd	
P9-1	PWM High side output (B+ when active)	*Speed One Tray controller*
P9-2	PWM High side output (B+ when active)	*Down valve*
P9-3	High side output (B+ when active)	*Brake*
P9-4	High side output (B+ when active)	*Pump contactor*
P9-5	High side output (B+ when active)	*Drive contactor*
P9-6	High side output (B+ when active)	*Available*
P9-7	High side output (B+ when active)	*Available*
P9-8	switch input (B+=active)	
P9-9	High side output (B+ when active)	*Available*
P12-1	switch input (B+=active)	*GND select/supply*
P12-2	switch input/Low side sw	*Battery Cutout*
P12-3	switch input/Low side sw	
P12-4	switch input (B+=active)	*Available*
P12-5	switch input (B+=active)	*N/C*
P12-6	Low side sw. 1.7A min.	*Beacon/Buzzer*
P12-7	Analog Input	
P12-8	B+ feed	*B+ supply for sensors/switches*
P12-9	switch input (B+=active)	*Elevation Switch*
P12-10	Analog Input	
P12-11	Analog Input	
P12-12	Analog Input	
P15-1	switch input (B+=active)	*Platform Mode*
P15-2	switch input (B+=active)	
P15-3	switch input (B+=active)	
P15-4	Low side sw. 1.7A min.	*Available*
P15-5	switch input (B+=active)	
P15-6	switch input (B+=active)	
P15-7	Low side sw. 1.7A min.	*Horn*
P15-8	switch input (B+=active)	
P15-9	switch input (B+=active)	
P15-10	Low side sw. 1.7A min.	
P15-11	switch input (B+=active)	
P15-12	5V (low current, for sensors only)	
P15-13	Analog Input	
P15-14	Analog Input	
P15-15	0V (low current, for sensors only)	

CAN TILLER	DESCRIPTION	INPUT
P10-1	out 1	*Tray UP*
P10-2	out 2	*Tray Down*
P10-3	ana 1	*Accelerator*
P10-4	ana 2	*Steer*
P10-5	5V for ana	
P10-6	neg for ana	
P10-7	B+ supply in	*FROM P15-1*
P10-8	B- supply in	*FROM B-*
P10-9	CAN H	*FROM P3-1 of TS100*
P10-10	CAN L	*FROM P3-2 of TS100*
P12-1	digital input 1	*Foot switch*
P12-2	digital input 2	
P12-3	digital input 3	*Trigger Switch*
P12-4	digital input 4	*Available*
P12-5	out 3	*Tray Enable*
P12-6	Sw. B+supply	
P12-7	digital input 5	*LIFT UP*
P12-8	digital input 6	*LIFT DOWN*
P12-9	digital input 7	*Available*
P12-10	digital input 8	*Available*
P12-11	digital input 9	*Available*
P12-12	digital input 10	

SECTION 7
7.5 WIRING DIAGRAM LUI MINI P.A.

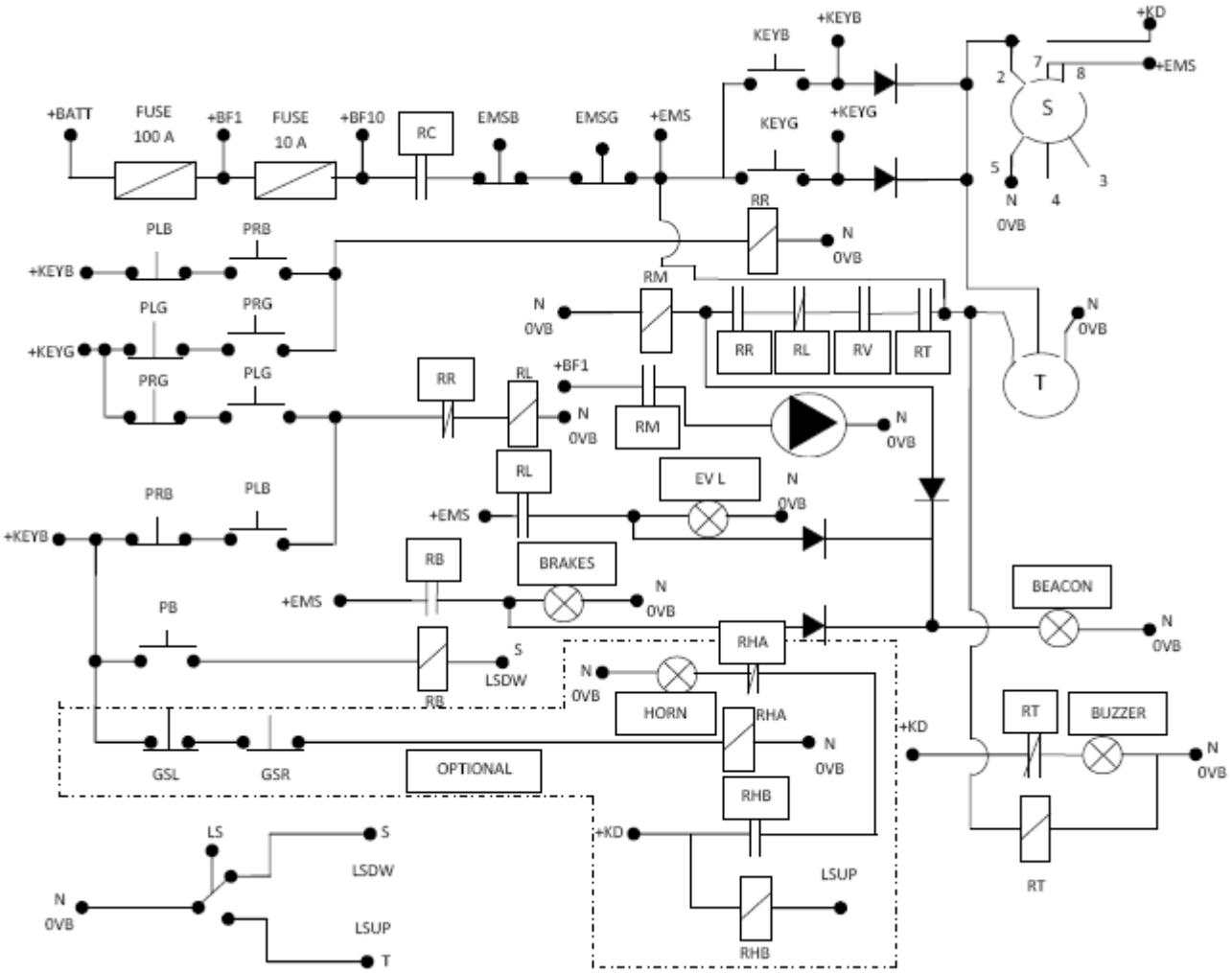

RHA: HORN A RELAY
BF10: +V ON 10A FUSE
RHB: HORN B RELAY
BF1: +V ON 100A FUSE
RR: RAISE RELAY
0VB: 0 VOLT BATTERY
RL: LIFT RELAY
S: BATTERY GAUGE
RB: BRAKES RELAY
T: TILT DEVICE
RV: BATTERY INDICATOR RELAY
NORMALLY CLOSED
NORMALLY OPEN
RT:TILT DEVICE RELAY
LS:LIMIT SWITCH
EMSG: GROUND EMERGENCY BUTTON
LSUP: NORMALLY CLOSED LIMIT SWITCH RAISED BASKET
EMSB: BASKET EMERGENCY BUTTON
RM:PUMP RELAY
LSDW: NORMALLY CLOSED LIMIT SWITCH LOWERED BASKET
PLB: LOWERPUSH BUTTON BASKET POSITION
PRB: RAISE PUSH BUTTON BASKET POSITION
PLG: LOWER PUSH BUTTON GROUND POSITION
PRG: RAISE PUSH BUTTON GROUND POSITION
PB: BRAKES PUSH BUTTON
KEYB: KEY SWITCH ON BASKET POSITION
KEYG: KEY SWITCH ON GROUND POSITION
+KD: +V FROM KEY SWITCH POSITION
+EMS: +V EMERGENCY STOP BUTTON

LIMITED WARRANTY—Warranty Statement

IF THE WARRANTY IS NOT INCLUDED IN THE SALES CONTRACT, THE FOLLOWING GUIDELINES APPLY TO THE MACHINE WARRANTY.

The Manufacturer BRAVIISOL SRL warrants that all new units of equipment manufactured and sold by it conform to the Company latest specifications. Moreover, Mast and hydraulic cylinder carry a Special Warranty of 10 years. The manufacturer warrants its equipment to the original purchaser against defect in material and/or workmanship under normal use and service for 3 years from date of registered sale or date the unit left the factory if not registered. Excluded from such warranty is the battery(s) which carries 1 year warranty from described purchase date. Warranty claims within such warranty period shall be limited to repair or replacement of the defective part in question. The manufacturer will send, free of charge, any component recognized as having faulty design or defective construction. The labor to perform the necessary repair or replacement and the travel expenses involved carry a warranty of 1 Year from described purchase date, based on the Manufacturer's then current flat rate.

Warranty claims are valid ONLY providing the defective part in question is shipped prepaid to the Manufacturer and is found upon inspection by the Manufacturer to be defective in material and/or workmanship. Furthermore, warranty claims can be accepted ONLY when all information specifically required by the Manufacturer (such as Serial Number) are provided.

The manufacturer reserves the right to replace, repair, exchange, or to provide a new, used or rebuilt component, assembly, sub-assembly, or weldment based on its unquestionable judgment.

THIS WARRANTY POLICY DOES NOT COVER DAMAGES CAUSED BY:

1. *Shipment*
2. *Misuse of unit, including operation beyond Factory established limits, loads and/or specifications.*
3. *Natural disasters (such as flood, fire, wind and lightning)*
4. *Failure to properly service and maintain the unit in accordance with the Company manuals or Factory Service Bulletins.*

BRAVIISOL DOES NOT ACCEPT ANY RESPONSIBILITY FOR:

1. *Any part requested for work that was tampered with.*
2. *Unauthorized alterations or modifications to the unit carried out without being agreed upon in writing in advance with the manufacturer.*
3. *Labor on consumable items, such as tire, batteries*
4. *Any indirect incidental, consequential or special damage (including without limitation to loss and profits, loss of revenue, cost of capital, cost of substitute equipment, downtime, examination fees, claims of third parties, and injury to person or property) based upon any claim of breach of warranty, breach of contract, negligence, strict liability in tort, or any legal theory.*

ELECTRICAL COMPONENTS ARE COVERED BY THE WARRANTY UNDER THE FOLLOWING CONDITIONS
The battery is properly connected for re-charge, according to the specifications of this manual and/or electrical drawing provided by the Manufacturer.

PROCEDURE OF THE WORKS COVERED BY THE WARRANTY:

- *The manufacturer must be notified of all claims covered by the warranty within 48 hours of the anomaly, in writing or by fax (not only verbally) and as detailed as possible.*
- *Warranty claims should be forwarded to your nearest local distributor or directly to the Manufacturer:*

BRAVIISOL Divisione Meccanica s.r.l.
S.S. 16 Adriatica km. 314,600
60022 Castelfidardo (AN) - Italy
Tel. +39.071.7819090
Fax +39.071.7819355
info@braviisol.com

Absolute E-Z Up LLC
295 Seven Farms Drive Suite C-193
Charleston, SC 29492
843-388-2556---office 843-388-2558---fax
www.absolutee-zup.com

- *The manufacturer will confirm, in writing or by fax, eventual acceptance of the covered works carried out by the customer or will provide guidance of his own technicians for works to be performed.*
- *Any defective material replaced by the customer (authorized by the manufacturer) must either be held 120 days so that the manufacturer can question or verify defective material. If needed defective parts will be sent back to the Manufacturer.*
- *If required, please, take photographs of the defective part and of the area where the machine has been operated. This is both to prevent unpleasant controversies and to improve the quality, warranty, and safety of our machines.*

THIS WARRANTY STATEMENT IS EXCLUSIVE AND IN LIEU OF ALL OTHER WARRANTIES, EXPRESSED OR IMPLIED. ALL SUCH OTHER WARRANTIES, INCLUDING IMPLIED WARRANTIES OF MERCHANTABILITY AND OF FITNESS FOR A PARTICULAR PURPOSE, ARE HEREBY EXCLUDED. No employee, dealer, Sales Representative, or other person purporting to act on behalf of BRAVIISOL DM SRL is authorized to alter the terms of this warranty, or in any manner assume on behalf of the Manufacturer any liability or obligation which exceeds BRAVIISOL DM SRL obligations under this warranty.

Braviisol Divisione Meccanica s.r.l.
S.S. 16 Adriatica km. 314,600
60022 Castelfidardo (AN)
Italy

Tel. 0039.071.7819090
Fax 0039.071.7819355

E-mail: info@braviisol.com
Sito: www.braviisol.com